VYSOKÉ UČENÍ TECHNICKÉ V BRNĚ
BRNO UNIVERSITY OF TECHNOLOGY

FAKULTA ELEKTROTECHNIKY A KOMUNIKAČNÍCH TECHNOLOGIÍ
ÚSTAV JAZYKŮ

FACULTY OF ELECTRICAL ENGINEERING AND COMMUNICATION
DEPARTMENT OF LANGUAGES

Elektrotechnologie – překlad odborného textu

BAKALÁŘSKÁ PRÁCE
BACHELOR'S THESIS

AUTOR PRÁCE Adam Klouda
AUTHOR

VEDOUCÍ PRÁCE doc. PhDr. Milena Krhutová, Ph.D.
SUPERVISOR

BRNO, 2017

VYSOKÉ UČENÍ TECHNICKÉ V BRNĚ
FAKULTA ELEKTROTECHNIKY A KOMUNIKAČNÍCH TECHNOLOGIÍ

Bakalářská práce

bakalářský studijní obor **Angličtina v elektrotechnice a informatice**
Ústav jazyků

Student: Adam Klouda | ***ID:*** 173586
Ročník: 3 | ***Akademický rok:*** 2016/17

NÁZEV TÉMATU:

Elektrotechnologie - překlad odborného textu

POKYNY PRO VYPRACOVÁNÍ:

Přeložte 15 stran odborného elektrotechnického textu do angličtiny. Připravte podklady pro analýzu rozdílů a shody ve vyjádření odborné informace v obou jazycích.

DOPORUČENÁ LITERATURA:

Tribun EU, 2009,

Knittlová Dagmar: Překlad a překládání, Olomouc, 2015

Krhutová Milena: The language of electrical engineering as a special province, CERM, Brno, 2007

Termín zadání: 23.2.2017 | ***Termín odevzdání:*** 2.6.2017

Vedoucí práce: doc. PhDr. Milena Krhutová, Ph.D.
Konzultant:

doc. PhDr. Milena Krhutová, Ph.D.
předseda oborové rady

ABSTRACT

Bachelor’s thesis “Electrotechnology – commented translation” aims at translating Czech scientific text into English language, which is used as a study material for students of Electrotechnology, and to convey comparative analysis of both the original and the translated text. The source text is divided into nine chapters from which several extracts were selected and analysed in terms of linguistics. Each of them is concerned with different area of electrical engineering and diverse variety of scientific terms is used. This bachelor’s thesis offers essential theory concerned with translation of scientific texts written in style of science and technology.

KEYWORDS

Electrotechnology, Commented translation, Comparative analysis, Translation, Style of science and technology, Stylistics, Textbook

ANOTACE

Cílem semestrální práce “Elektrotechnika – komentovaný překlad” je překlad českého odborného textu do angličtiny, který slouží jako studijní materiál pro studenty elektrotechnologie, a provést komparativní analýzu originálu a přeloženého textu. Zdrojový text je rozdělen do devíti kapitol, z kterých bylo vybráno několik výňatků na nichž byla následně provedena analýza z lingvistického hlediska. Každý z nich se zabývá jinou oblastí elektrotechniky a používá k tomu odlišnou škálu odborných výrazů. Tato bakalářská práce take nabízí základní teorii zabývající se překladem textů psaných ve stylu vědy a techniky.

KLÍČOVÁ SLOVA

Elektrotechnika, Komentovaný překlad, Komparativní analýza, Překlad, Styl vědy a techniky, Stylistika, Učebnice

KLOUDA, A. *Elektrotechnologie - překlad odborného textu.* Brno: Vysoké učení technické v Brně, Fakulta elektrotechniky a komunikačních technologií, 2017. 78 s. Vedoucí bakalářské práce doc. PhDr. Milena Krhutová, Ph.D..

PROHLÁŠENÍ

Prohlašuji, že svou bakalářskou práci na téma *Elektrotechnologie - překlad odborného textu* jsem vypracoval samostatně pod vedením vedoucího semestrálního projektu a s použitím odborné literatury a dalších informačních zdrojů, které jsou všechny citovány v práci a uvedeny v seznamu literatury na konci práce.

Jako autor uvedené bakalářské práce dále prohlašuji, že v souvislosti s vytvořením této bakalářské práce jsem neporušil autorská práva třetích osob, zejména jsem nezasáhl nedovoleným způsobem do cizích autorských práv osobnostních a/nebo majetkových a jsem si plně vědom následků porušení ustanovení § 11 a následujících zákona č. 121/2000 Sb., o právu autorském, o právech souvisejících s právem autorským a o změně některých zákonů (autorský zákon), ve znění pozdějších předpisů, včetně možných trestněprávních důsledků vyplývajících z ustanovení části druhé, hlavy VI. díl 4 Trestního zákoníku č. 40/2009 Sb.

V Brně dne ....

(podpis autora)

ACKNOWLEDGEMENT

I would like to express my gratitude to doc. M. Krhutová for sharing her valuable expertise. Her time and professional advices are greatly appreciated.

TABLE OF CONTENTS

INTRODUCTION

To understand a message carried by a set of specific words of a certain discourse community in our native language can prove to be difficult. To translate the sentence into another language which comes from a different language family and preserve the same message requires certain level of knowledge of both languages, linguistics and the specific professional field, especially the associated stylistics.

English is a Lingua Franca in scientific fields. In the translation of scientific texts, it is most important to conserve the message even if it means completely reorganizing the sentence in terms of structure and grammar. Each language uses different scientific terms for the same mechanical device or physical process. For this reason, it is essential to use dictionary focused on the specific field with which the text deals with.

As a student of English in Electrical Engineering and IT, I have chosen the translation of study materials oriented on students of Geotechnology. It is written in the style of science and its purpose is to explain the principles of electrical engineering used in mining. This text provides the readers with essential knowledge of electrical machines and devices used in their field of study. For this reason, it is abundant in scientific terms from different areas of the professional field. It also includes exercises which consist of extracts from the source text that I found interesting to translate.

The aim of my bachelor's thesis is to translate the Czech original into English and convey comparative analysis on several aspects. In many cases, it was necessary to divide the sentence and transform its structure. Furthermore, I chose several extracts that proved to be difficult to translate because of the differences between the language systems of Slavic and Germanic languages. These extracts characterize their differences from the point of linguistics and they were implemented into the theoretical part as a device that illustrates the topic described in the current chapter.

In the following pages, there is a theoretical part which introduces the reader to the essential theory related to translation of technical texts. In this part, I chose several extracts from the original text and its translated version in order to compare them and comment on their features and differences. After the theoretical part, there is a copy of the translated text in English language and the original text in Czech.

THEORY

The aim of the theoretical section of this thesis is to introduce and explain the essential theory associated with the source text. This text, which was used for translation from Czech to English, is a textbook used by teachers and students of High School of Technology in the town of Karviná and is a perfect example of a text written in formal style of science and technology.

In the introductional part of this bachelor's thesis, which is the first chapter, only the most necessary theory is introduced in relation to the source text, such as the differences between the style of science and technology and the popular scientific style. Since the source text is written in style of science and technology, entire chapter 2 is devoted to thorough explanation of the typical features of this style, such as the use of passive voice and register. There are several extracts from both the source text and the translated text that demonstrate these features in detail.

Chapter 3 represents the speech acts that frequently occur in scientific texts and their basic functions which contribute greatly to the form which is understandable and easily recognized among authors writing in academic settings.

The aim of chapter 4 is to recapitulate and summarize the approaches which were introduced and mentioned in previous chapter. The literature which was used as an information source for the chapter 3 and 4 is the Parameters of Professional Discourse/English for Electrical Engineering written by doc. Milena Krhutová.

Since the practical part of this thesis was to translate the source text written in Czech language to English, chapter 5 deals with the procedures of translation which are used in problematic translation situations, for example in technical texts.

The sixth chapter defines Czech language as an analytic language and English as a synthetic language and further explains their differences and the problematics of the translation from one language system to the other. Whatsmore, there are several extracts that illustrate their major differences.

1. Introduction to style and genre

1.1. Style

Among authors writing in academic style, there are two popular styles which occur frequently. These are style of science and technology and popular scientific style.

The style of science and technology aims at professionals and academics who are interested in the given topic, are already motivated to read the text, have advanced knowledge in the concerned field and are well acquainted with the terminology in use. There are many graphs, tables and diagrams that are used for explanation. The level of formality is rather high and personal approach is used sporadically. The informative weight is on high level since the text is written by the professionals for audience comprised of experts and semi-experts.

The aim of popular scientific style is to attract the reader not only with the form in which the text is written, but also with colorful pictures, graphs and photos. The level of formality is relatively low and personal approach is frequently used in order to involve the reader into the interaction with author. This way, the reader gains the feeling of being on the same level of knowledge as the author and finds it more appealing to read the text. The information provided is rather elementary for the reason that the author expects that the audience is rather uninstructed.

However, this thesis is concerned with translation of a text written in style of science and technology. There are multiple cases in which personal approach is used and thus a subjective approach is applied. These instances occur mainly in calculation examples. One of the cases is demonstrated in the following example which can be found in the source text (ST) and the translated text (TT) at the end of chapter 1.5.3 of the source text.

ST: *Jaký počet závitů musí být na sekundární cívce vůči primární, jestliže chceme mít na sekundární cívce 10 x větší proud než na cívce primární?*

TT: *How many turns are necessary on the secondary coil if we require 10 times larger current on the secondary coil in comparison to the primary coil.*

In this example, the author chooses the personal approach represented by the pronoun *we*, which is not typical for the style of science and technology, but it was used as a device for encouraging the audience in solving the calculation exercise. In the Czech language, the pronoun describing the first person in plural is omitted. Instead, the first person in plural is expressed by the verb *chceme.*

The most typical feature of the popular scientific style is the use of expressions such as *we, our.* The reason is that the text tends to be more informal and it should give the reader feeling of being on the same level of knowledge as the author. According to Krhutová, such expressions "are used in order to encourage the reader, establish a close connection to reader, and also create a feeling that the concerned field of science is both accessible and easy to understand. This way, attention of the reader is drawn" (2009:57).

The source text is written in the style of science and technology and its definition and typical features are explained thoroughly in chapter 2.

1.2. Genre

In order to understand the meaning of genre, it is necessary to explain the term. According to Widdowson, the genre is: "A type of discourse in written or spoken mode with particular characteristics established by convention, e.g. a cooking recipe, a letter of application, a sermon" (1996:127). Kramsh adds that: "Whereas a literacy event is defined as any interaction between readers and written texts within a social context, a genre is a socially sanctioned type of communicative event, either spoken – like a sermon, a joke, a lecture – or printed, like a press report, a novel, or a political manifesto" (1998:62).

This means that the genre is defined by agreed social conventions and each genre is characteristic with common features which share all the texts that belong in the specific genre. There are certain rules established which are necessary to follow while writing a text. As the society evolves, new genres emerge. Nowadays, there is a genre of email which did not exist few decades ago.

There are many genres used in academic settings and even more genres of literature. In the following list, however, only the most common academic genres recognized by Lund University are mentioned:

- Research Articles
- Textbooks
- Abstracts
- Reviews
- Undergraduate text type
- PhD Theses
- Popular scientific writing
- Posters
- Grant proposals
- Essay format [1]

The genre of the selected text is a textbook, which is an academic genre. The main objective of a textbook is to communicate established facts to students interested in given subject. It presents knowledge in a comprehensible way and explains how and why the presented principle or machine works and how it has been and can be used. The goal is to inform and instruct, provide general introduction to the matter. A textbook presents existing views within the subject, not the opinion of the author [2].

According to Bhatia, the purpose of a textbook is to "make accessible established knowledge in a particular discipline to those readers who are being initiated into a specific disciplinary culture" (1998:17). In other words, the goal of a textbook is to outline the current knowledge available in given discipline, rather than to present new claims (Hyland, 2009).

---

[1] Writing in Academic Genres [online]. Lund University, Dec. 2, 2016 [Accessed on: 23rd April, 2017]. Available from: http://awelu.srv.lu.se/genres-and-text-types/writing-in-academic-genres/
[2] Academic Genres [online]. Sok and Skriv, Feb. 4, 2014. [Accessed on: 1st April, 2017]. Available from: http://sokogskriv.no/en/reading/academic-genres/

Textbooks are logically organized into chapters and subchapters that gradually explain certain topics. Furthermore, relevant problems which occur in that field are presented in a form of calculation exercises. Textbooks concerning with electrotechnology are written in informal style, using descriptive sentences and comprehensive definitions that present physical principles and well-known facts in given field. It is also necessary to use graphological devices to simplify and explain the problematics to the reader. Krhutová notes that for this purpose, elaborate pictures and other semiotic supportive means, such as figures, graphs, pictures and equations, are used (2009:54).

2. Features of style of science and technology

According to Knittlová (2010), style of science and technology is mostly conveyed in written form and lectures are regarded as secondary form of this style. The goal is to communicate thorough information to the audience as precisely and appositely as possible. It is written as a monologue and feedback from the addressee is absent, there is no situational context, non-verbal devices are not available in order to help with explaining the problematics. For this reason, the contents and formality of the discourse must be complete and consistent.

Knittlová adds that this is achieved by "using special terminology of the concerned field and precise syntax. As a result of rich and challenging content, the text must be stylistically and grammatically precise and comprehensible to ensure that the information is conveyed smoothly and correctly understood. In order to achieve this, connectors, deixis, cohesive devices and references are used to ensure hierarchy in the text. Since the aim of style and science and technology is to convey precise information, the syntax is stereotypical and logically structured" (2010:149).

Another typical feature is the level of formality of the text, which is widely used in exact sciences. The author is not important in the context and is set aside by using the passive voice. By suppressing the personality of the author, certain level of objectivity is achieved. This phenomenon is closely described in the following chapter.

2.1 Passive voice

The texts written in the style of science and technology are required to be both objective and formal. It is possible to achieve this by using passive voice. Passive voice raises the level of formality and according to Knittlová, the main advantage is that it is not necessary to specify the agent. For this reason, it is used in situations where the agent is not important to mention, most typically in exact sciences (2010:151). Krhutová adds that using any signs of subjectivity might be perceived as an unreliable source and in technical fields it is ordinary to co-operate in teams (2009:45).

Typical use of passive voice can be demonstrated on the following example which can be found at the beginning of chapter 5.1 in the source text.

ST: *Elektrické motory* ***se používají*** *v hornictví pro pohon dopravníků, dobývacích strojů, hydraulických agregátů, důlních lokomotiv, těžních strojů apod.*

TT: *Electric motors* ***are used*** *in mining as actuators on automatic conveyers, continuous miners, hydraulic aggregates, mine trains, mining machines etc.*

In English, passive voice is formed by using *to be + past participle.* In Czech, however, it is possible to choose from two methods of creating passive voice. The first option is to use *být + past participle.* The second method is by using reflexive pronoun *se + past participle.* In this example, the author of the original text used the first option to form the passive voice. In technical settings, it is not necessary to mention who uses these electric motors, because it is obvious and not important in given context.

2.2 Lexical and syntactical features

Since the author aims at being precise and clear while explaining the problematics of concerned field, the text tends to be stereotypical in terms of both lexicology and syntax. Knittlová claims that "in exact sciences, unambiguous terms must be used in order to deliver explicit information to the audience. The most frequent word categories are generally **nouns** and adjectives. The terminology used is composed of words with clearly defined meaning in particular scientific discipline" (2010:149). These claims are demonstrated on the following extracts that can be found in the source text and translated text in chapter 5.3.

ST: ***Motor*** *s paralelním* ***buzením*** *- budící* ***vinutí*** *je připojeno paralelně k* ***vinutí motoru****. Budicí* ***vinutí*** *má velký* ***počet závitů*** *malého* ***průřezu****.* ***Reostatem*** *lze měnit budicí* ***proud*** *a tím se mění* ***otáčky rotoru*** *ve velkém* ***rozsahu****.* ***Motor*** *má ještě spouštěcí* ***rezistor****, u kterého se při* ***rozběhu motoru odpor*** *zmenšuje a při skončeném* ***rozběhu*** *je* ***velikost odporu spouštěče*** *nulová.*

TT: ***Motor*** *with shunt* ***excitation*** *– excitation* ***winding*** *is connected in parallel to the* ***motor's winding****. The excitation* ***winding*** *has large* ***number*** *of* ***turns*** *with small* ***cross section****. It is possible to change the excitation* ***current*** *using the* ***rheostat*** *and change the* ***rotor's revolutions*** *in wide* ***range****. In* ***addition*** *to that, the* ***motor*** *has also resistance* ***starter*** *which lowers its* ***resistance*** *as the* ***motor*** *starts up and after a successful* ***start*** *the* ***resistance*** *is equal to* ***zero****.*

In terms of lexicology, it is possible to depict the terms frequently used in the field of electrotechnology. In the previous extracts of the source text and translated text, the terms *excitation, winding, resistance, motor, odpor, budící, and vinutí* occur several times in a short paragraph. The reason for that is that there is no equivalent that would replace these terms. More importantly, the style of science and technology is concerned with delivering explicit and clear information and using synonyms would lower the coherence of the given text. Another example that can be found in chapter 1.5.3 in the source text and translated text.

ST: *Jednofázový* ***transformátor*** *se skládá z* ***cívky*** *primární (vždy je připojena ke* ***zdroji*** *střídavého* ***napětí****), sekundární* ***cívky*** *a* ***jádra*** *složeného ze vzájemně odizolovaných* ***plechů****, aby se snížily* ***ztráty*** *způsobené Foucaltovými - vířivými* ***proudy****.*

TT: *A single-phase* ***transformer*** *comprises of primary* ***coil*** *(it is always connected to* ***source*** *of alternating* ***voltage****), secondary* ***coil****, and* ***core****. The* ***core*** *is composed of mutually insulated* ***sheet steel laminations*** *in order to lower the* ***losses*** *caused by Foucault* ***currents****.*

***nouns**, adjectives

Speaking of syntax, present tense simple is used frequently because the validity of the proposition in terms of electrotechnology is timeless.

2.4 Register

To be able to translate efficiently, it is necessary to be aware of the register used in the source text. The register is determined by factors such as context, purpose of the text and concerned audience. These factors are called stylistic variation. The choice of register and the associated terminology is very important in terms of style of science and technology because in most cases, the text is written in a form of a monologue and published as a written text. This means that there is no feedback from the reader to the author and vice versa. Fort this reason, the author and the reader cannot rely on the context and use of non-verbal devices and the author must use clear, unambiguous terms in order to be understood correctly. The syntax is also important, as was mentioned in the previous chapter.

In academic writing, more specifically in style of science and technology, one of the defining features of a register is the use of jargon, which is special technical vocabulary associated with given discipline. Yule claims that in social terms, jargon helps “to create and maintain connections among those who see themselves as 'insiders' in some way and to exclude 'outsiders''' (2006:211). According to Halliday, it is possible to identify the register by describing three variable elements which differ according to the genre: field, tenor and mode (1985, 30-35).

The first element is field. The field of the text is a topic with which the given text is concerned. In this case, it is a textbook of electrotechnology and it concerns with related subtopics, such as the principles of operation of electrical devices. There are particular names of objects involved which identify the context of electrotechnology. These include devices such as thermal power stations, nuclear power plants, electric circuits with its component (batteries, conductors, light-bulbs, inductors, resistors, etc.), galvanic cells, transformers, and electric motors. Whatsmore, there is wide variety of terms connected to each subtopic of electrotechnology.

The second element, which is named tenor, is described by participants of discourse and the level of formality between them. The source text is written by professionals in the field of electrotechnology and it communicates to an audience which comprises of high school students of electrotechnology and people generally interested in the mentioned field.

The last element is called mode and it is concerned with the form in which the text is communicated to the audience, such as written form, audiovisual form, visual form or vocal form. Furthermore, the form of a monologue or dialog is taken into account. This text is delivered to the audience via written text in a form of a monologue.

Taking these elements into consideration, it is possible to identify a technical register. It is typical for the field of electrotechnology and to an “outsider”, these terms may seem as incomprehensible nonsense. However, an “insider” acquainted with these terms and the theory associated to them is able to comprehend this technical register. It is typical with words that have fixed meaning in the described scientific discipline. In addition to that, half-terms which are shared by all sciences, such as process, effect, function, operate, feature, are used. Whatsmore, it is impossible to find interjections, phraseology, dialect or slang in these texts.

In the following list, typical terms of technical register of electrotechnology are introduced. Furthermore, the correct way of their translation is presented. In addition to that, the possible errors which could occur if the text was translated by a person with insufficient insight into the professional field of electrotechnology is presented.

- electrolytic dissociation : *electrolytická disociace*
- electrolytes : *elektrolyt*
- condenser : kondenzátor
- nuclear fission **:** *jaderné štěpení*
- motors with shaded pole : *motor se stíněnými póly*.
- shunt excitation : *paralelní buzení*
- winding : *vinutí*
- alkaline : in chemistry, the correct and most commonly used equivalent of this term is *zásaditý. Alkalický* is also correct but its use would appear odd in this context.

- squirrel-cage : this term is used to describe a type of asynchronnous electric motor. In Czech language, there is only one way to translate the term correctly: *kotva nakrátko.* However, the translation could go terribly wrong if the translator neglects the use of special dictionary. In this case, the worst scenario is use of calque. The literal translation, which is not suitable for the field of electrotechnology, of this term would be *klec na veverku.*

2.5 English terms in Czech language

Since English is regarded as a Lingua Franca in science and technology, it is common to encounter English terms used in Czech literature. These terms are borrowed from the source language (SL) and implemented into the target language (TL). This way, the languages are interconnected and it makes it easier for the reader to switch from one to another while the terminology remains unchanged. The procedure of translation named borrowing is explained in the chapter 3.

In the source text, there are many instances in which an English term was borrowed and implemented into Czech. In the following list, there are many examples of an English technical term that is commonly used and is comprehensible for the discourse group interested in the field of electrical engineering. In order to translate these terms correctly, it is essential to have some knowledge in the concerned field and more importantly, to use a special dictionary dedicated to the translation of terms in the given discipline.

turbogenerátor : turbogenerator

turboalternátor : turboalternator

neutron/neutrálně nabitá částice : neutron

elektron/záporně nabitá částice : elektron

proton/kladně nabitá částice : proton

moderátor : moderator

elektromagnetický : electromagnetic

integrovaný : integrated

alternátor : alternator

dynamo : dynamo

elektrolýza : electrolysis

katoda : cathode

anoda : anode

indukce : induction

frekvence/kmitočet : frequency

transformace : transformation

transformátor : transformer

hystereze : hysteresis

resistor : resistor

motor : motor

stator : stator

rotor : rotor

komutátor : commutator

reostat : rheostat

The use of English terms in Czech language is very common, especially in the field of science and technology. The main advantage is that the students are enabled to navigate in English literature associated with the field of their study by using the terminology with which they are already acquainted from the Czech written books which use English terms. The reason why there is an increasing amount of English terms used in Czech language is that the rate at which the industry of science and technology grows is increasing rapidly and thus it is unnecessary to create Czech equivalents if the English term can be adapted instead, which is also less complicated for the users of the Czech language.

3. Speech acts

The meaning of the term speech acts was defined by Widdowson as "aspects of the language and aspects of the external circumstances in which it is used on a particular occasion, its context of occurence" (2000:63). Krhutová notes that their pragmatic meaning is achieved in a speech act as an illocutionary act (2009:121). Speech acts as a part of discourse are devices that contribute to a clear delivery of a message directly to the reader. She further comments that the audience depends on the mental schemata which were formed from their own experience and in the field of professional variety of language, it is the professional experience and knowledge that enables them to decode the delivered information (2009:121). For an author, it is recommended to be aware of these facts and to use these devices appropriately in relation to the given topic while writing a paper.

In terms of style of science and technology, the function of a speech act is either to describe, to inform, to explain, to conclude, to argue, or to evaluate. Krhutová (2009:122) defined the typical speech act in academic settings is a lecture and the typical genres, or literacy events, is a wide variety of specific texts with specific purposes. Their aim is to perform their typical functions:

- Explication
- Exemplification
- Evaluation
- Argumentation
- Definition
- Concluding

These functions will be further described in the following subchapters, each of them dedicated to one specific function of a speech act in a text written in style of science and technology. This chapter is mainly based on the book Parameters of Professional Discourse/English for Electrical Engineering, which was written by doc. Milena Krhutová.

3.1 Explication

In style of science and technology, there are many complicated topics that the author introduces to the audience. The level of knowledge of the author and the reader is supposed to be on the same level, since both of them are professionals. The audience of texts written in style of science and technology is presumed to be composed of professionals and semi-professionals and for this reason, there are certain topics that do not require further explanation since the level of knowledge required from the audience is defined by the topic. In relation to the source text, the authors rely on a higher degree of professional knowledge of the readers, in this case, the students. In contrast to that, authors of texts of popular scientific style have higher degree of knowledge than their readers and for this reason it is necessary to be as explicit as possible. The author of a popular scientific text simply cannot rely on the presupposition that the reader already knows each single detail in the given field and for this reason must include additional explanation. The following example can be found in the TT in chapter 5.2.3.

TT: *The rotor of* ***this asynchronous electric motor*** *consists of a system of mutually connected* ***conductors*** *– bars (**squirrel-cage**). The bars of the squirrel-cage rotor winding are made of aluminium and they are manufactured by* ***die casting****. The size and shape of* ***rotor bars*** *influence the run-up characteristics of the motor.*

In this extract, the terminology in **bold** is not necessary to explain because the text aims at instructed readers with a certain level of knowledge of electrotechnology. The information is implicit. In a popular scientific text, it would be necessary to explain the meaning of these terms. Furthermore, the text is written in formal manner with impersonal approach to the reader.

This extract can be found in the TT in chapter 3.2.

TT: *The circuit can be found not only in the size of an integrated circuit, but can also be connected into a larger electric network. If the path formed by the electric circuit is closed, then* ***we speak of*** *a closed circuit.* ***We speak of*** *an open circuit if there is an opened switch. Individual components by which the electric circuit is formed are usually interconnected by conductors.*

This chapter was probably written by different author and for this reason shares some features with the popular scientific style. The use of first person plural pronouns is a typical strategy used by authors writing in this style to raise the motivation of the audience and imply that the author and the reader are on the same level of knowledge. This way, the reader is encouraged to continue in reading and educate himself, which is a typical approach used by teachers. It still demonstrates higher degree of explicitness. For an expert, this strategy would prove uncomfortable to read. Krhutová adds that this would violate the maxim of quantity (2009:128). However, the audience of the source text are high school students and the strategy in use is suitable for this purpose.

Another feature of a popular scientific text is the use of the deictic noun *our*. The personal and informal approach of the author to the reader is most commonly used in texts written in popular scientific style, however, it can be also found in certain parts of a textbook. This extract can be found in the TT in the chapter 3.1.

TT: *In our calculations we also use the quantity* ***current density****:* $j = \frac{I}{S}$

The features of the style of science and technology are: formality, implicitness, impersonality. In contrast to that, the opposite features are typical to the popular scientific style: informality, explicitness, personality.

3.2 Exemplification

According to Krhutová, the popular scientific style uses irreal situations, metaphors and projections in order to explain the problematics to the reader (2009:137). In contrast to that, these methods are considered non-professional and it is not possible to use them in the academic settings and in texts written in the style of science and technology. The examples tend to be less illustrative, descriptive, precise and more concentrated on the given problematics. This can be demonstrated on the following extract that can be found in the TT in the chapter 3.3.1.

TT: *Electrical current in fluids is conducted by ions that arise in the fluid by electrolytic dissociation, which is the decomposition of the substance under the influence of the dissolvent.*

3.3 Evaluation

In her book, Krhutová wrote that evaluation is a strategy used primarily in scientific texts in order to present the authors' opinions and research results to the reader. They evaluate and compare the results with conclusions in other authors' publications (2009:137). Since the field of science and technology is developing and new facts constantly replace the old, the authors feel the necessity of expressing a certain degree of uncertainty, such as the following phrases and words: *it can be argued, seems to be, as expected, may, it is expected.*

This speech act is not frequently used in texts written in popular scientific style. The reason is that there is no content to evaluate, there is no contribution to the scientific field which could be commented by the author and the information included are facts that are delivered to an uninstructed reader. In relation to the source text, the purpose of a textbook is not to present new facts and the research results, but rather to inform and educate the audience.

3.4 Argumentation

While presenting the author's research results, it is necessary to support them with facts. Krhutová notes that one method is to support these findings by quoting others, especially the most influential authors in the related scientific discipline. Another method is the choice of words which articulate the approach of the author and justify their own methods of progression and conclusion (2009:142).

3.5 Defining

While defining certain topic in a publication written in the style of science and technology, the recommended approach is to be formal, impersonal and use implicit and precise definitions in order to avoid violation of the maxim of quantity. In the academic settings of electrical engineering, the author must also avoid using ambiguous terminology and expendable word forms. Krhutová adds that other semiotic signs such as tables, figures and specific fonts, e.g. Greek letters, are used to support the definition (2009:144). This is common in the field of science and technology. In the following extract, which can be found in the TT in chapter 3.4.1, there is a definition of the Ohm's law that demonstrates the aforementioned methods.

TT: *Electric current flowing through the conductor is directly proportional to the voltage at the terminals of the conductor with constant electric resistance.*

Ohm's law $\boldsymbol{I = \frac{U}{R}}$ $\boxed{U = R \cdot I}$

I is electric current; A (ampere)

U is electric voltage; V (volt)

R is electric resistance; Ω (ohm)

3.6 Concluding

The texts which belong in the popular scientific style include conclusion in which the discussed subject is summarized, which should be both formulated in simple and logical way. This enables the reader to recapitulate the contents of the chapter and remember the most important facts, which is essential in a textbook. The conclusions of the style of science and technology share this trait. Whatsmore, the conclusion in a scientific paper is enriched with the author's research results, propositions of possible solutions to the problem, commentary on the contribution of the research paper in relation to the work of other authors and presents his future research intentions.

4. Approaches to recipients

In the previous chapter, six basic functions of speech acts in an academic discourse were introduced and described. Krhutová describes the discourse used for specific purposes as a unique whole of the individual parameters which are interconnected in a way that create the language with specific features and together they form a sophisticated system (2009:149). For this reason, the aforementioned features will be presented again in the following list:

- Impersonality/personality
- Objectivity/subjectivity
- Vagueness/definiteness
- Formality/informality
- Uncertainty/certainty

The difference between the **impersonal** and **personal** approach is the applicability. The personal approach is used in texts written in the popular scientific style with the aim of making the text comprehensible to wide audience which comprises of uninstructed readers. Colloquiality, lack of specific terminology and personal approach are typical features of this style.

In the style of science, the personal approach is used rather occasionally, as was mentioned in the chapter 3. Krhutová notes that the aim of the style of science is to make the text sound as objective as possible, to support the scientific approach and reliable research results of its authors (2009:152). Since the research in the electrical engineering is conducted in teams, the research results are presented in an objective and informal manner. Krhutová adds that “the more formal the style is designed, the more professional knowledge is presupposed and the more objectivity is expressed by linguistic means” (2009:155).

The personal and impersonal approach is interconnected with **objectivity** and **subjectivity**. This can be demonstrated on the following extracts. In the source text, which is written in style of science and technology, there is an instance in which a subjective personal approach was used. This extract can be found in the TT at the beginning of chapter 3.1.

TT: ***In our calculations we*** *also* **use** *the quantity current density:* $j = \frac{I}{S}$

In opposition stands the objective impersonal approach that can be found in the TT at the beginning in chapter 3.1.

TT: ***The magnitude*** *of the electric current I* ***is calculated*** *using the following formula:* $I = \frac{\Delta Q}{\Delta t}$

Krhutová distinguishes two aspects of objectivity (2009:158):

- **Linguistic** aspect is a typical part of each scientific discipline. It is used to express the author's effort to include all previous knowledge in the discipline, his politeness and his ideas. The objectivity is expressed in the following forms: *it is necessary, it is important, it is probable, there is, there are, etc.*
- **Pragmatic** objectivity is expressed by common approaches of a discipline to reality, its idea of objectivity which differs in exact and technical sciences compared with social sciences. Social sciences display a higher degree of linguistic occurrence of subjectivity, for example: *Let us return to our notion, I would argue that, I want to introduce, etc.* The reason is, as was mentioned previously, that the author is usually a single person, whereas in exact and technical sciences the research was conducted by a team.

Another interesting feature is the level of **uncertainty** used in text. The presented facts can be weakened by using expressions such as *seem, can, expected, slight, especially, acceptable,* which are used to follow the maxim of modesty and the agreement maxim. Hedging is also used for this purpose. Krhutová notes that hedging expresses a modulation of illocutionary force. Its interdisciplinary status confirms the overlap and interconnections of all the features of the variety (2009:150). In the source text, there are no instances in which hedging was used, since it is a textbook that presents facts. Hedging can be conducted, for example, by using the following phrases: *could happen, might, can, may, should, might perhaps even, probably, would, etc.*

Uncertainty is frequently used in order to formulate ideas, research results and new findings in scientific settings. The authors are aware of the fact that other experts may see things from different point of view. For this reason, uncertainty is used to avoid collisions and enable other professionals to contribute to their work with new facts or critique.

5. Procedures of translation

In technical texts, translator frequently encounters terms that are difficult to translate for the reason of absence of direct equivalents. In order to solve this situation there are seven basic procedures of translation which are divided into two categories. In this chapter, I use characteristics of seven main translation procedures which were described by Vinay and Darbelnet.

5.1 Direct Translation

Transcription is a procedure that uses different language system to transform a term. If different alphabetical systems are encountered during the translation, transliteration causes certain phonetic deformation.

Calque is a special variation of borrowing in which the target language borrows expression from the source language by translating each of the original elements literally. The translation creates either a lexical calque that both preserves the syntactic structure of the target language and introduces a new mode of expression, or a structural calque which creates a new construction in the language. For example, *skyscraper* is translated to Czech as *mrakodrap*.

Substitution is a method that replaces the original with an equivalent, for example a noun with a pronoun.

5.2 Indirect translation

Transposition is based on necessary grammatical changes. It can also be applied within a particular language. It enables the translator to fine-tune the stylistic elegance of the translated text. In translation of technical text from English to Czech, this method is used frequently since the English is defined as analytical language and Czech language is synthetic. In the following example, which can be found in the ST and TT at the beginning of chapter 5.2.3, transposition is demonstrated.

***ST**: Velikost a tvar rotorových tyčí ovlivňuje rozběhovou charakteristiku motoru, proto se vyrábějí rotory s různými tvary drážek, buďto je drážka kruhová, nebo hluboká.*

***TT**: The size and shape of rotor bars influence the run-up characteristics of the motor. For this reason rotors of different slots shape are manufactured. The slots are either round or rectangular.*

Another example of transposition can be found in the ST and TT at the beginning of chapter 3.2.

***ST:** Ideálním rezistorem rozumíme zařízení, v němž při průchodu proudu vzniká jen tepelná energie. V ideální cívce se vytváří jen magnetická energie a v ideálním kondenzátoru se vytváří jen elektrická energie.*

***TT:** An ideal resistor is a device which generates only thermal energy while current flows. An ideal coil generates only magnetic energy and an ideal capacitor generates only electric energy.*

Modulation, according to Knittlová, is based on changing the form of the message through an alternation in perspective. For example, *elbow of the pipe : koleno potrubí* (2010: 19).

Equivalence is a procedure that reformulates the TL by using different stylistic and structural methods. Typical example is translation of exclamations, expressive, idioms and expletives, Typical example is the Czech idiom *zabít dvě mouchy jednou ranou*. Its equivalent in English is *kill two birds with one stone.* Furthermore, animal sounds frequently demand reformulation.

Adaptation is used when the type of situation referred to by the SL does not sound naturally in the TL culture. In such cases the translator must recreate a situation that can be regarded as more or less equivalent. This procedure is widely used in translations of movie and book titles.

According to Knittlová, there are two additional methods that can prove useful while translating a text (2010, 19-20).

Borrowing is the simplest of all procedures and it involves using foreign phrasing the target text. This procedure is especially common in the style of science and technology, since new technologies are constantly introduced. Typical examples in Czech language are *rotor*, *stator*, *asynchronní, synchronní, neutron, proton.* Other way around, the term robot is a Czech word that is used widely around the world.

Literal translation is a word for word translation which is based on the direct transfer of a text from SL into grammatical and meaningful text in TL. This procedure is unacceptable in the field of electrotechnology. For example, literally translated term *squirrel cage* would probably result in the term *veverčí klec*, which is incomprehensible in the context of electrotechnology not only to the “insider”, but also to the “outsider”.

6. Analytic vs. synthetic language

There are two major language systems being recognized in the field of linguistics. These are the analytic languages and the synthethic languages. In this thesis, the source text is written in synthetic language, which is Czech, and the translated text is written in analytical language, which is English. These are in contrast and in the following paragraphs, basic definition and their features is presented.

Analytic languages convey grammatical relationships effectively without using inflectional morphemes. They have low morpheme-per-word ration and rely on using definite and indefinite articles in order to convey their meaning. Another typical feature is the word order which is strict and certain rules need to be followed. If not, the meaning of the message may be corrupted. In these languages, wide variety of prepositions, postpositions, particles and modifiers, idiomatic meanings and context is used [3].

Synthetic languages have high morpheme-per-word ratio and rarely use definite and indefinite articles for conveying message. The word order is not bound by strict rules and for this reason tends to be more flexible than synthetic languages [4].

[3] Analytic language [online]. Wikipedia, 2017, [Accessed on: 6th April, 2017]. Available from: https://en.wikipedia.org/wiki/Analytic_language
[4] Synthetic language [online]. Wikipedia, 2017, [Accessed on: 6th April, 2017]. Available from: https://en.wikipedia.org/wiki/Synthetic_language

There are several examples on which the differences between the Czech and English are demonstrated and explained. These extracts can be found at the beginning of chapter 3.2 in the ST and TT.

ST*: Ideálním rezistorem rozumíme zařízení, v němž při průchodu proudu vzniká jen tepelná energie. V ideální cívce se vytváří jen magnetická energie a v ideálním kondenzátoru se vytváří jen elektrická energie.*

TT*: An ideal resistor is a device which generates only thermal energy while current flows. An ideal coil generates only magnetic energy and an ideal capacitor generates only electric energy.*

The previously mentioned sentences are perfect example of the differences between Czech language and English language. Czech belongs into synthetic languages and English is described as analytical language. While Czech language tends to present the information in a fruitful way that demonstrates the wide range of ways of formulating the sentence. In contrast to that, English is straightforward and its aim is to get to the point as quickly and accurately as possible. During the translation, the possibility of translating the sentence literally was condemned for the reason it would prove difficult to understand. Instead, these sentences were transposed and its grammatical form was changed in order to focus on conveying the message as precisely and effectively as possible. For this purpose, the passive voice used in the source text was omitted in the translated text.

The following sentences can be found in the ST and TT in chapter 3.2

ST*: Prvky splňují funkce, které jsou od obvodu požadovány, například* ***zesílení*** *signálu,* ***vytváření*** *elektromagnetických vln apod.*

TT*: Components fulfill functions which are requested from the circuit, for example* ***to amplify*** *signal,* ***create*** *electromagnetic waves and the like.*

The main difference between these two versions of the same message is the use of grammatical devices. This instance is marked in **bold**. In Czech, the author uses noun **zesílení**, **vytváření** which is not possible to translate to English while preserving the grammatical form. Instead, verb in a form *to + inf* is used in order to translate it to **to amplify** and **create** and thus preserve the natural flow of the sentence.

The following extracts can be found in the ST and TT in chapter 1.5.3.

ST*: Kolikrát je větší počet závitů na sekundární cívce než na primární, tolikrát je na sekundární cívce větší napětí než na cívce primární a tolikrát tam je menší proud.*

TT*: The magnitude of the voltage on the secondary coil is directly proportional to how many times is the number of turns on the secondary coil larger to the number of turns on the primary coil. The same principle applies to the current, which is in this case lower.*

The active voice in ST was conserved in TT. However, the grammatical form of ST was changed and the original sentence was expanded into two sentences because of the differences between analytical and synthetic languages that tend to be more flexible and comprehensible for native reader. Thanks to transposition, the original message was preserved and the TT is comprehensible to an English-speaking reader. This is an example of semantic translation, which is defined as "overtranslation", which means that the information is added in order to preserve the meaning of the original message.

Czech language is typical with its flexibility in the use of grammatical devices and syntax in the construction of sentences. There are many possibilities of formulating one sentence while the resulting message and comprehensibility is similar. Typical example is the Czech poetry and literature in which occur flowery sentences and the message is still conveyed. This is a typical feature of a synthetic language. In contrast to that stands the English language which is a member of the analytic language group. English relies heavily on the strict word order and the grammatical rules by which the sentences must be formulated in order to remain comprehensible and natural. Otherwise, the message or the coherence may be corrupted.

CONCLUSION

The most difficult task in translation of the selected text was not to select correct term used in the specific area of electrical engineering, since there are many are many materials such as specialized dictionaries and scientific articles on which a translator can rely. The most difficult task was to find the simplest and clearest way of explaining the matter while preserving the original message.

In most cases, to conserve the original grammar and syntax is not as important as to convey the original message precisely and unambiguously. In order to achieve this, I had to divide an original sentence into multiple ones and to completely reorganize the word order. The method of transposition proved to be effective in multiple cases since the English analytic language does not offer as many possibilities of formulating the sentence as the Czech synthetic language.

The easiest part was to translate the basic theory and principles of electric current, electric voltage and electric resistance, such as Ohm’s law. However, there were calculation exercises with many examples from a section that proved to be hard to formulate in order to be understandable.

In translation of the genre of textbooks, especially in this case in which the textbook was written in style of science and technology, it is necessary to respect the stylistics chosen by the author of the text. This genre and style relies heavily on the form in which the text is written for the reason that the message must be conveyed precisely. Many features, such as passive voice, simple syntax and precise terminology, is used in order to achieve this goal. If these demands are not satisfied, the text loses its value and cannot be used as a reliable study material.

In my translation, I aimed at conveying the message precisely while respecting both the format of the original text and its structure. However, the differences between the two previously mentioned language systems were the reason why I had to transpose the sentences and reorganize the word order. Another important factor was to use proper terminology.

LIST OF REFERENCES

Source text

Kubica, J. & Wojnar, J. *Elektrotechnika.* Karviná, 2013.

Publications

Bhatia, V.J. *Analysing Genre. Language Use in Professional Settings*. London: Longman, 1993.

Bhatia, V.J. *Patterns in fundraising discourse*. 1998.

Halliday, M.A.K., Hasan, R. *Language, Context, and Text: aspects of language in a social-semiotic perspective.* Oxford: Oxford University Press, 1985.

Knittlová, D. *Překlad a překládání.* 1st ed. Olomouc: Univerzita Palackého v Olomouci, Filozofická fakulta, 2010. ISBN 978-80-244-2428-6

Kramsh, C. *Language and Culture.* Oxford, New York: Oxford University Press, 1998.

Krhutová, M. *Parameters of Professional Discourse*/*English for Electrical Engineering.* 1st ed. Brno: Tribun EU, 2009. ISBN 978-80-7399-839-4

Newmark, P. *A textbook of translation.* London: Prentice-Hall, 1998. ISBN 0139125930

Urbanová, L. *Úvod do anglické stylistiky.* Blansko: Tisk Reprocentrum Blansko, 2002. 80-86598-33-0.

Widdowson, H.G. *Linguistics*. Oxford: Oxford University Press, 1996.

Widdowson, H.G. *Discourse analysis*. Oxford: Oxford University Press, 2006. Oxford introductions to language study. ISBN 978019438211

Yule, G. *Pragmatics*. Oxford: Oxford University Press, 1996. Oxford introductions to language study. ISBN 0194372073.

Yule, G. *The Study of Language.* Cambridge: Cambridge University Press, 2006. ISBN: 0-521-54320-7

Dictionaries

Malinová, L. et. al. (1993). *English-Czech and Czech-English Dictionary of Electrical Engineering and Electronics*. 3rd ed. Brno: EPA, 1993. ISBN 80-900870-1-9

Expository Dictionary

Vícejazyčný slovník, [online]. Langsoft. Available from: http://www.slovnik.cz/

TRANSLATED TEXT

1.4 Power stations

1.4.1 Thermal power station

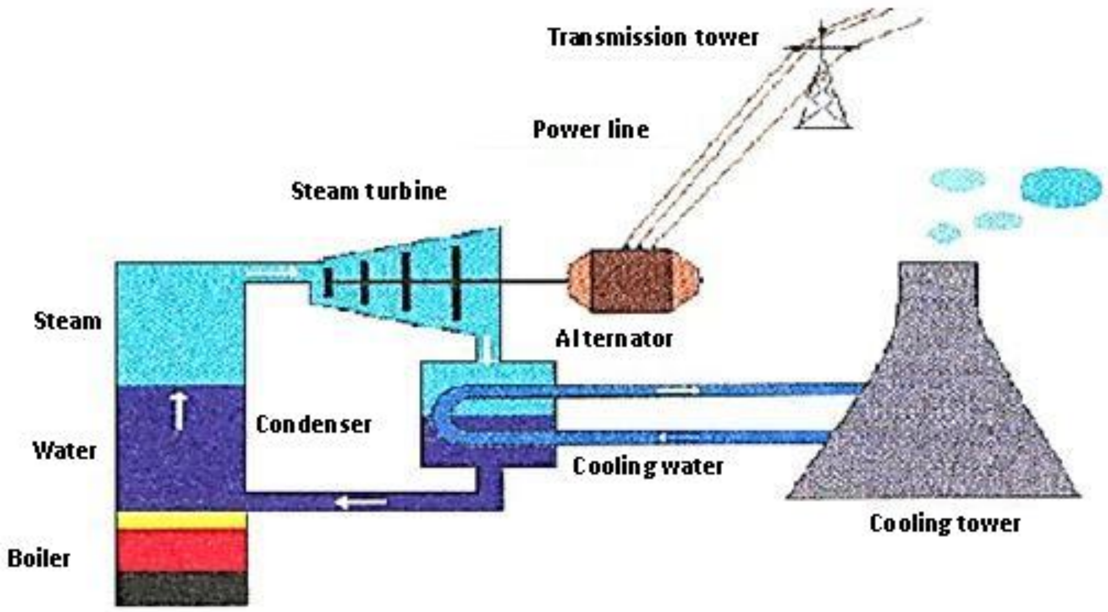

Fig. 4.1 *Thermal power station scheme*

By burning fossil fuel, usually brown coal, heat is released which is used to heat up the water in boiler and this creates steam which has high temperature and pressure. Steam funnels to the steam turbine blades. A portion of the energy is converted into kinetic energy of the turbine. Electric current generator is placed on the same axis as the turbine. This aggregate is called turbo generator or turbo alternator. After the steam passes the turbine it funnels into a condenser, where it is cooled by water. A pump forces the condensed steam back into the steam boiler and the whole process is repeated.

Cooling towers stand next to every thermal power station, where the cooling water is cooled by streams of air. The cooling water is used to cool the steam in a condenser and heats itself this way. Apart from the previously described power station which generates only electric energy, there are also thermal power stations that are able to generate both power and heat. A portion of the available steam energy is used to produce electricity and another portion is used for remote heating of apartments and industrial objects. The connection of a thermal power station and heating plant is called cogeneration unit.

As well as heat engines, it is possible to use the energy of superheated steam only partially. It is theoretically possible to achieve an efficiency of $[(800 - 400)/800] \cdot 100 =$ 50 % if the inlet temperature is 530 ºC □ 800 K and outlet temperature 130 ºC □ 400 K. In practice, turbo generators achieve 45 % efficiency. This is because during a conversion of turbine's mechanic energy to electric energy we achieve efficiency greater than 90 %. $(50 * 90) \cdot 100 = 45\%$

1.4.2 Nuclear power plant

The only difference from common thermal power station is the heat source needed to create steam. The source is nuclear reactor in which heat is generated by nuclear fission of uranium 238, which is enriched by uranium with nuclear number 235, by slow neutrons. The nuclear fission is only possible by slow neutrons, which get stuck in the atom's nucleus. This creates two hefty elements and three new neutrons, which continue to fission more uranium nuclei. In nuclear reactors, there are important components called control rods. These are rich on cadmium and are able to absorb neutrons completely and stop the nuclear fission. Another important component is moderator (graphite or heavy water), which slows down neutrons. The thermal system of nuclear power plant has two circuits as a protection from radiation. The water in the primary circuit circulates in active zone of reactor, absorbs the heat which was generated by the nuclear fission of the uranium by slow neutrons. The same heat is used to heat up the water in secondary circuit which flows in the steam generator (heat exchanger). Steam is used to spin the turbine just as in common thermal power stations.

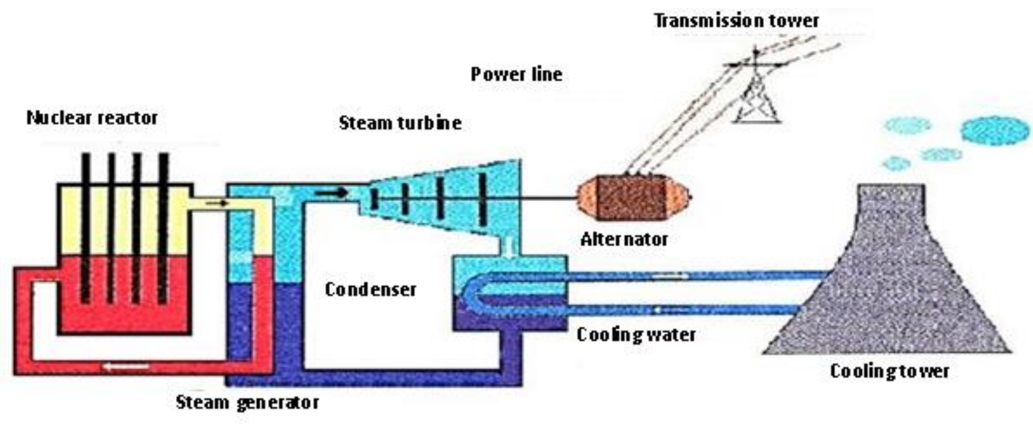

Fig. 5.1 *Nuclear power plant scheme*

1.5.3 Transformer

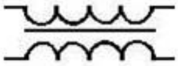

Fig. 15.1 *Symbol of transformer*

Transformer is non-rotary electric machine which transforms alternating values of voltage and current to greater or lower values of the same frequency.

A single-phase transformer comprises of primary coil (it is always connected to source of alternating voltage), secondary coil, and core. The core is composed of mutually insulated sheet steel laminations in order to lower the losses caused by Foucault currents.

Transformer operates on the principle of electromagnetic induction – the change of current in the primary coil in time induces voltage on the secondary coil.

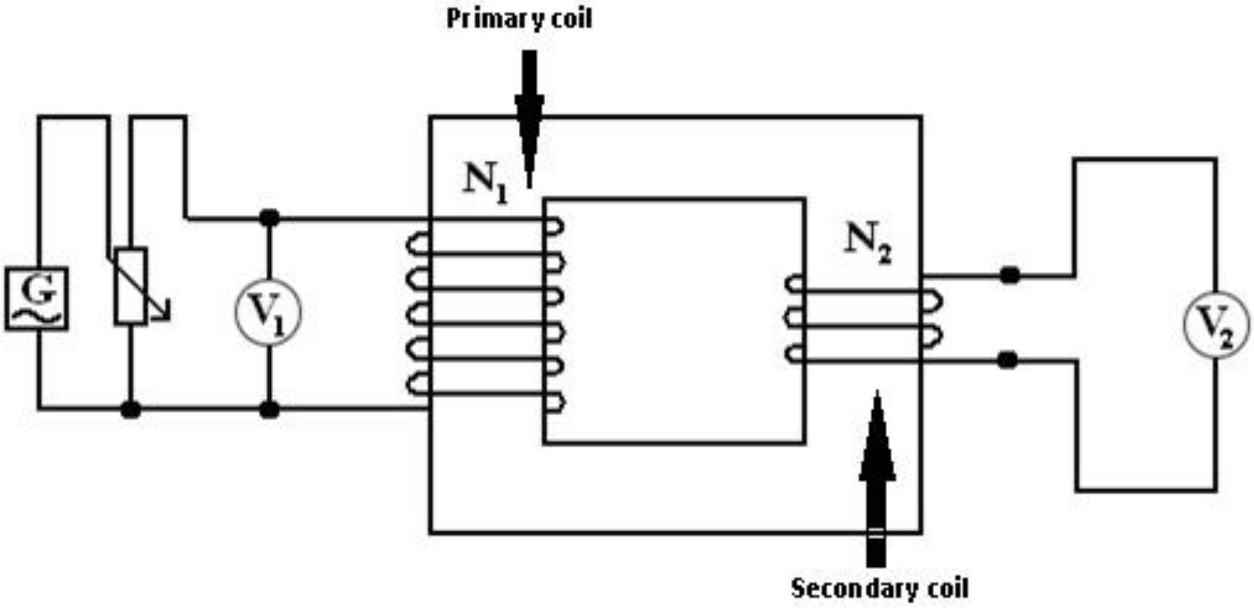

Fig. 16.1 *Transformer – arrangement in circuit.*

For voltage U_1 this formula applies: $U_1 = N_1 \frac{\Delta\Phi}{\Delta t}$ *and for voltage U_2 this formula:* $U_2 = N_2 \frac{\Delta\Phi}{\Delta t}$

Transformer equation is applied to the ratio of induced voltages. The equation defines voltage transformation ratio which is known as constant **k** (letter p is also used in electrical engineering, but the ratios are inverted):

$$k = \frac{N_2}{N_1} = \frac{U_2}{U_1} = \frac{I_1}{I_2}$$

if **k** > **1,** then the transformer is called step-up transformer.

if **k** < **1,** then the transformer is called step-down transformer.

N_2 is the number of turns on the secondary coil

N_1 is the number of turns on the primary coil, which is **connected to the source of alternating voltage**

U_2 is the voltage on the secondary coil; V

U_1 is the voltage on the primary coil; V

I_2 is the current on the secondary coil; A

I_1 is the current on the primary coil; A

It is possible to apply the following rule in order to calculate examples using the transformer equation:

The magnitude of the voltage on the secondary coil is directly proportional to how many times is the number of turns on the secondary coil larger to the number of turns on the primary coil. The same principle applies to the current, which is in this case lower.

In electrical engineering, it is possible to invert the transformer equation. After that, the voltage transformation ratio is known as p instead of k. In this case the ratio of values is inverted. The results still remain the same.

For a transformer, it is not possible to achieve 100 % efficiency. However, it is possible to assume that they in calculations of the ratios. The operation of the transformer is influenced by losses which are caused by overheating of the conductors on the coils, eddy-currents and hysteresis.

Single-phase transformers are applied in cases when it is necessary to change the values of current or voltage – broadcasting systems, measuring devices, cell-phone chargers, slot car tracks for children.

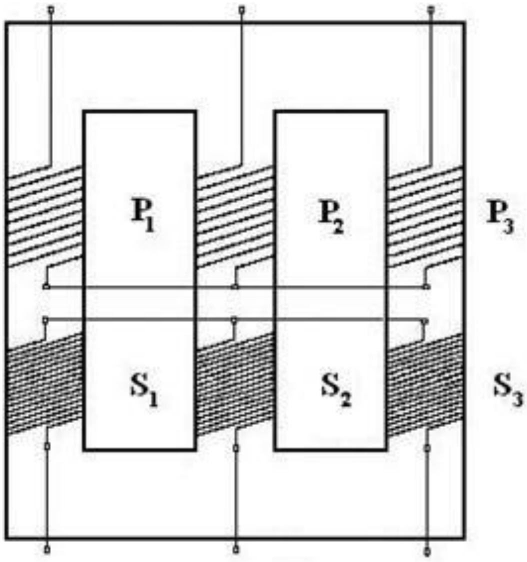

Fig. 17.1 *Three-phase transformer*

Three-phase transformers comprise of three magnetic branches. Each phase has its own primary and secondary winding. The coils of primary or secondary winging are mutually connected in Y-connection or delta connection.

Large power transformers tend to overheat during their operation. For this reason it is necessary to include a cooling system. Larger transformers are submerged in a special container filled with oil which takes away heat and is being cooled by air through the container surface.

<u>**Exercise 1**</u>

1. Using the figure of the transformer, determine the number and ratio of its turns and calculate the voltage and current on the secondary coil. On the primary coil, there is a voltage of 10 V and a current of 20 mA.

   [U_2 = 5 V, I_2 = 40 mA]

2. How many turns are necessary on the secondary coil if we require 10 times larger current on the secondary coil in comparison to the primary coil.

[N_1 is 10 x lower]

3. The primary coil has 600 turns, the secondary coil has 6 turns. There is a voltage of 230 V and a current of 10 mA across the primary coil. Determine the magnitude of the voltage and the current on the secondary coil.

[U_2 = 2.3 V, I_2 = 1 A]

4. The power consumption of the transformer is 800 W with an efficiency of 96%. Determine the magnitude of the current flowing through the secondary coil across which is a voltage of 100 V.

[I = 7.68 A]

5. Determine the transformer ratio of a transformer which is connected to a 230 V power source if we want to drain a voltage of 10 V and a current of 2 A from the secondary coil. What is the magnitude of the current I_1?

[k = 0.0435; I_1 = 0.087 A]

6. Where do we practically need a high voltage on the secondary winding, low voltage and high current?

Chapter 3

Electric circuit and its components

3.1 Electric current distribution in metals

Electric current in metals is distributed by free electrons which exist in the crystal lattice of the metal. Direct electric current is described as the movement of free electrons of the metal in one direction. The technical direction of the current is specified to flow from the + pole to the – pole of the power source. Technical direction of the current is the direction of the movement of the positive charge in the circuit (in the opposite direction of the movement of the electron). The magnitude of the electric current I is calculated using the following formula:

$I = \frac{\Delta Q}{\Delta t}$ $\quad$ $Q = I \times \Delta t$ $\quad$ $\Delta t = \frac{\Delta Q}{I}$

ΔQ is the change of the electric charge (Δ describes the change of the quantity), C is the unit of the electric charge and its name is coulomb */ˈkuːlɒm/*, Δt is the change of time, the unit is s = second.

Electric current of 1 ampere (A) flows in the electric circuit if an electric charge of 1 coulomb (C) passes the circuit in 1 second (s).

In our calculations we also use the quantity **current density**: $j = \frac{I}{S}$

The current density is defined as a vector j, which is oriented in the direction of the movement of positive charge and its magnitude is numerically equal to the magnitude of the current, which passes the unit area.

The unit is $A \cdot m^{-2}$ (in technical practice the unit $A \cdot mm^{-2}$ is used).

Exercise 1

1. Determine the magnitude of the electric current which flows in the wire if the charge of 2 μ C passes the conductor in 2 ms.

[I = 1 mA]

2. Determine the time which is needed for the electric charge to pass the wire, if an electric current of 5 mA flows in the conductor.

   [Δt = 0.0004s]

3. Determine the magnitude of the electric charge that passes the conductor in 5 minutes. There flows an electric current of 0.25 A in the conductor.

   [Q = 75 C]

4. The diameter of a conductor is 0.226 mm. Determine the magnitude of the current in the conductor if the current density is 4 A · mm -2.

   [I = 0.16 A]

5. Determine the magnitude of the electric charge which passes the conductor in 1 day. There flows a current of 20 mA in the conductor.

   [Q = 1 728 C]

6. Determine the radius of the conductor if there is a current density of 5 A· mm-2 and a current of 10 A flows in the conductor.

   [r = 0.8 mm]

3.2 Electric circuit

Electric circuit is a conductive interconnection of electronic components (resistors, coils, capacitors, light-bulbs etc.) with power sources. An ideal resistor is a device which generates only thermal energy while current flows. An ideal coil generates only magnetic energy and an ideal capacitor generates only electric energy. **Each of these components is both *passive* (they can never be a stable power source) and *linear* (they are independent of the current and voltage). *Active* components are source of power and they are *non-linear* (they depend on the magnitude of the current and voltage).** Of course, ideal components are models, which we cannot find in practice. But under certain conditions it is possible to simulate certain processes on them. It is possible to imagine each electric circuit as a combination of passive and active components. The characteristics of real components which are used in practice always have different parameters. This is expressed in alternative schemes. For example, each coil has aside for the inductance a resistance. For this reason it is possible to replace the coil with a coil and a resistor connected either in series or parallel

Components fulfill functions which are requested from the circuit, for example to amplify signal, create electromagnetic waves and the like. The circuit can be found not only in the size of an integrated circuit, but can also be connected into a larger electric network. If the path formed by the electric circuit is closed, then we speak of a closed circuit. We speak of an open circuit if there is an opened switch. Individual components by which the electric circuit is formed are usually interconnected by conductors. A typical example of a simple electric circuit may be a battery (electric source), conductors, switch, and a light-bulb (appliance) (Fig. 3.2.1). In most cases, the situation is far more complicated. The reason is that the common appliances can compose of dozens, hundreds, or thousands of components from which can many form complicated interconnections which are composed of hundreds, thousands, or even millions of elements. Electric circuit also composes of multiple sources (e.g. interconnected battery sources) and several switches for disconnecting and switching various sections of the circuit.

The electric circuit needs to fulfill three conditions in order to distribute electric current:

1) It must include a power source
2) It must include an appliance
3) There must be a conductive interconnection between the appliance and the power source.

There must be a conductive interconnection between the appliance and the **power source.**

Exercise 2

Considering the previously mentioned rules, which of the four circuits will constantly distribute electric current? Why? (see fig. 1.3)

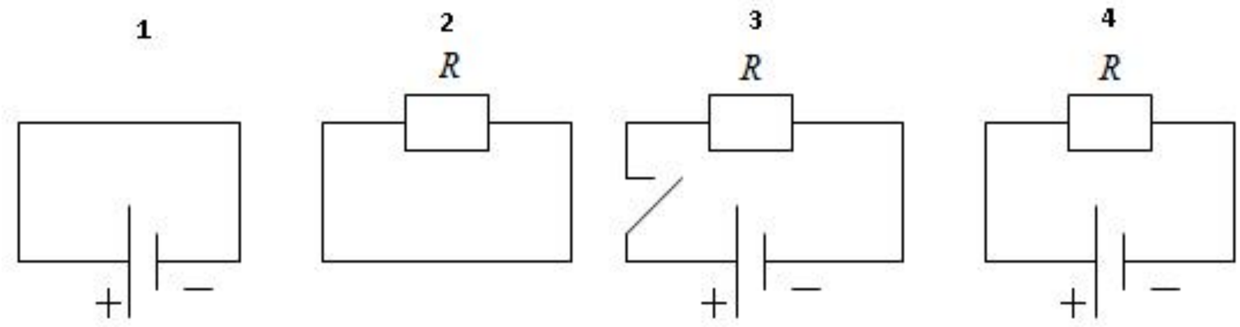

Fig. 1.3 *Circuits for exercise 5*

The following two figures illustrate a real circuit and a circuit drawn using electronic symbols.

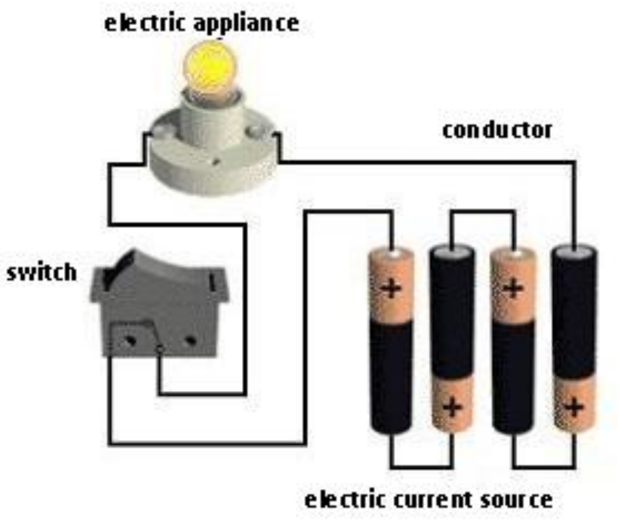

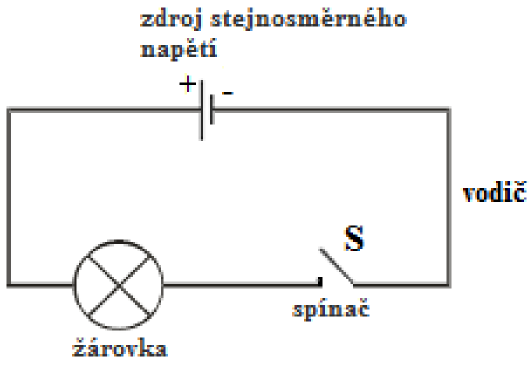

Fig. 2.3 *Real electric circuit*

Fig. 3.3 *Electric circuit drawn using* electronic *symbols*

3.3 Sources of electrical voltage and current

We divide the sources of electrical voltage and current to:

a) **direct voltage and current sources –** galvanic cells and

b) **alternating voltage and current sources –** alternator

c) The sources are further divided according to the voltage levels for which the appliances and transmission systems are designed.

3.3.1 Galvanic cells

Galvanic cell converts chemical energy to electric energy. Galvanic cell is comprised of electrodes and one or two electrolytes. On the electrodes, there arise chemical reactions which are the source of the electromotive voltage of the cell.

For its operation, galvanic cells use the **conduction of electrical current in fluids.**

Electrical current in fluids is conducted by ions that arise in the fluid by electrolytic dissociation, which is the decomposition of the substance under the influence of the dissolvent.

NaCl in water is separated into ions $Na^{+} + Cl^{-}$

NaOh in water is separated into ions $Na^{+} + (OH)^{-}$

HCl in water is separated into ions $H^{+} + Cl^{-}$

Negative ion – anion is formed by the removal of an electron from electrically neutral atom or molecule and **positive ion – cation** is formed by the addition of an electron to electrically neutral atom or a molecule.

Electrical current in fluid is a directed movement of ions.

Not every solution conducts electrical current. Solutions which distributed electrical current are called **electrolytes, which are salt, acidic or alkaline solution.** Sugar dissolved in distilled water does not separate into ions, which is the reason why it does not conduct electrical current.

If an electrolyte conducts direct electrical current, then the ions are separated on the electrodes.

Negative electrode is called **cathode** and during electrolysis, there are positive ions separated on its surface (cations).

Positive electrode is called **anode** and during electrolysis, there are negative ions separated on its surface (anions).

Hydrogen or metal is always separated on the cathode during electrolysis.

If the electrodes are made of copper and the electrolyte conducts direct current, then copper is separated on the cathode. At the same time, the copper is separated from the anode to the solution.

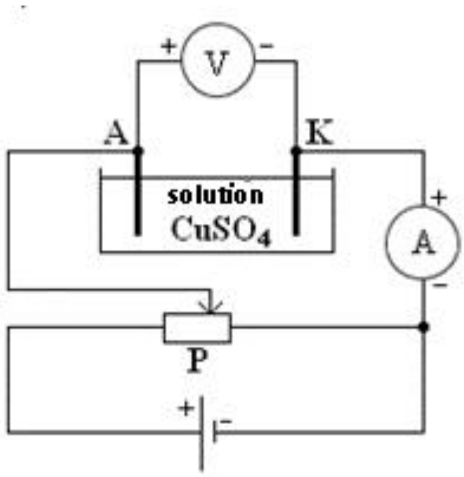

Fig. 4.3 Circuit as a demonstration of electrolysis

Faraday laws of electrolysis apply on the conduction of electric current in fluids:

1. $m = A \cdot Q = A \cdot I \cdot \Delta t$; g, kg

The amount of substance liberated at the electrodes in the process of electrolysis is directly proportional to electric charge that passed through the electrolyte.

m = amount of substance liberated (g; kg)

A = electrochemical equivalent ($g \cdot C^{-1}$; $kg \cdot C^{-1}$); it is a constant of a certain substance and you can find it in mathematical, physical and chemical tables

Electrochemical equivalent is numerically equal to the amount of substance liberated in grams (kg) by the passage of 1 C of electricity in the electrolyte.

Q = electric charge (C); *I* = electric current (A); Δt = time (s)

3.4.1 Ohm's law

Electric current flowing through the conductor is directly proportional to the voltage at the terminals of the conductor with constant electric resistance.

Ohm's law $\boldsymbol{I = \frac{U}{R}}$ $\boxed{U = R \cdot I}$

The linear dependence of current on voltage with constant resistance is expressed by the following equations.

Equation $R = \frac{U}{I}$ is derived from Ohm's law.

It is a calculation of ohmic invariable of the conductor (resistor) which is independent on the magnitude of the current and the voltage since **the resistance is a characteristic of a conductor (resistor).**

There is a resistance of 1 ohm in the conductor if a current of 1 A flows through the conductor and there is a voltage between its terminals.

I is electric current; A (ampere) *U* is electric voltage; V (volt)

R is electric resistance; Ω (ohm)

Electric resistance is a characteristic of a conductor, resistor (component).

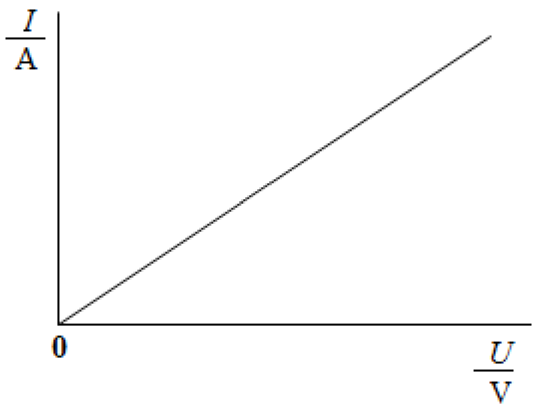

Fig. 12.3 *U-A characteristic of a resistor with constant resistance*

This is a graphic representation of the current dependence on voltage across a resistor for which Ohm's law is applied. The resistor has constant resistance if we omit its heating up.

This is a circuit diagram of an arrangement of components in a circuit on which we verify the Ohm's law. It is possible to use this circuit only in the case of low resistance. It is recommended to use resistance values lower than 100 Ω.

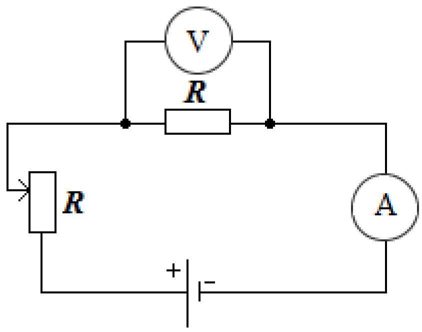

Fig. 13.3 *Circuit diagram for Ohm's law verification*

<u>Exercise 3</u> Examples for electric resistance calculation

1. What is the value of a resistor's electric resistance if we measured a voltage 100 V and a current of 250 mA passes through the resistor?

[R = 400 Ω]

2. Determine the magnitude of a voltage across a resistor with a resistance of 2 kΩ through which passes a current of 100 mA.

[U = 200 V]

3. Determine the magnitude of an electric current which passes through a resistor with a resistance of 200 Ω. There is a voltage of 100 V across the resistor.

[I = 0.5 A]

4. How does the value of an electric resistance of a component change in a circuit if the magnitude of the voltage doubles but the magnitude of the electric current stays the same?

[it doubles]

5.How does the value of the voltage across a resistor change if the magnitude of the resistance stays the same and the electric current's value lowers to half?

[it gets 2 times smaller]

6.Determine the length of conductors made of copper and aluminium if their resistance is 200 Ω and the cross section of the wire is 0.025 mm^2.

ρ_{Cu} = 0.0178 μΩm, ρ_{Al} = 0.0285 μΩm.

[l_{Cu} = 280.9 m; l_{Al} = 175.4 m]

7.Determine the magnitude of the electric resistance of a conductor which is 28,090 m long, made of copper and its cross section is 5 mm^2.

[R = 100 Ω]

8.Determine the electrical resistivity and conductivity of the material from which a conductor with a length of 1 km is made. Its diameter is 3.57 mm and the electrical resistance is 200 Ω.

[ρ = 2 μΩm, γ = 0.5 $MS \cdot m^{-1}$]

Chapter 5

Electric machines

5.1 Types of electric machines

Electric machines are devices which either generate electric energy or need it for their operation. The alternator (pg.52) and dynamo (pg. 51) belong into the first group, whose operation was already described in the previous chapters. Electric motors and transformers (pg.16) belong into the second group.

5.2 Electric motors

Electric motors are used in mining as actuators on automatic conveyers, continuous miners, hydraulic aggregates, mine trains, mining machines etc.

They are divided into **direct current** and **alternating current** motors depending on whether we feed the stator with direct or alternating current. Moreover, we use universal motors which are able to operate not only on the direct current but also with alternating current.

5.2.1 Direct current motors

Direct current motors consist of the following components:

- stator
- rotor
- commutator

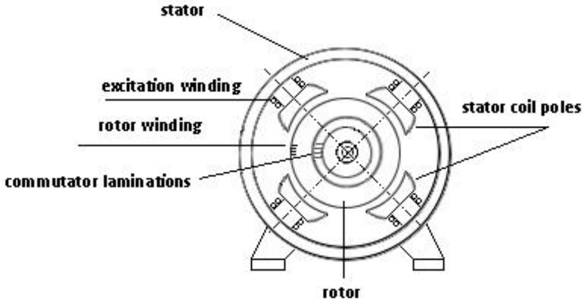

Fig. 1.5 Cross section of a direct motor

Stator is an immobile component of the motor. It consists of a stator frame with main poles and excitation winding.

Rotor is a mobile component of the motor. It consists of sheet steel laminations with insulated layer. On the surface of the rotor there are slots to hold the winding. There are terminals from which lead branches to the commutator bars.

Commutator converts direct current to the alternating current. Owing to the commutator there constantly flows a current in the same direction. For this reason is the magnetic force $F_m = B \cdot I \cdot l$ always oriented in the same direction.

B is magnetic induction; T (tesla)

I is electric current; A (ampere)

l is the length of active conductor; m (meter)

$\boldsymbol{F_m}$ is magnetic force; N (newton), read /ˈnjuːt(ə)n/

Depending on the type of mutual connection of the excitation winding and rotor winding, we divide the direct current motors on:

1. DC motors with shunt excitation
2. DC motors with series excitation
3. DC motors with compound excitation
4. DC motors with separate excitation

1. **Motor with shunt excitation** – excitation winding is connected in parallel to the motor's winding. The excitation winding has large number of turns with small cross section. It is possible to change the excitation current using the rheostat and change the rotor's revolutions in wide range. In addition to that, the motor has also resistance starter which lowers its resistance as the motor starts up and after a successful start the resistance is equal to zero. During the starting-up of the motor the resistance of the rheostat's excitation winding is equal to zero and maximal in the starter. The motor has solid characteristics. This means that with increasing load the revolutions drop just infinitesimally. Motor is suitable for every type of industrial drives, especially for

automated devices. For example, it is used in machine tools, automatic conveyors and means of transport.

2. **Motor with series excitation –** the winding of stator and rotor are connected in series and the current flowing in both windings is identical. The excitation winding has a small number of turns with large cross section. The motor has soft characteristics. This means that the revolutions lower significantly with the increasing load. This motor has large starting torque, the torque increases with the lowering revolutions. It is a typical traction motor suitable for electric vehicles and transport devices.

3. **Motor with compound winding –** includes winding of both types - parallel and series. It is possible to achieve characteristics similar to the motor with excitation winding both in parallel and in series. This depends however on what type of winding dominates.

It is possible to regulate revolutions of DC motors by these following means:

- *Changing voltage of rotor's power source* – it is realized by including resistance into the rotor's circuit. The rotor's revolutions lower with increasing resistance and vice versa. The regulations are performed in lower revolutions than on basic level. The economic benefits are the most efficient when the motor has its own regulated direct voltage source
- *Changing the excitation current* – the revolutions lower with increasing excitation current. The current is regulated by field winding circuit that includes rheostat. This is used to increase the revolutions above base speed. The losses are insignificant in comparison to the motor' power. This is achieved by combining the two previously mentioned methods.
- (*reversion*) – directional change of revolution realized by switching of the feed to excitation winding or motor winding.

5.2.2 Alternating current motors

1. Synchronous – the magnetic field revolutions are identical to the rotor revolutions.

2. Asynchronous – the magnetic field revolutions differ from rotor revolutions.

Asynchronous single phase motors - drive of household appliances. These are divided into:

Single phase motors with auxiliary resistance phase up to the power of 250 W. Since the heat load is high, these motors are not used as a drive that gets turned on and off frequently.

Motor capacitors with operating capacitor are suitable for light load or idle run drives.

Starting capacitor motors are suitable for machinery that works under high load (spin dryers).

Motors with both starting and operating capacitor (the starting capacitor is disconnected after the run-up) are used as drives with high load (compressors).

Motors with shaded pole are suitable for small powers up to 500 W. These motors are used to power ventilators, centrifugal pumps, spin dryers.

Aynchronous motors are used as a drive of large units which do not require regulation of the revolutions and frequent starting up. In mining, these motors are used to power compressors, ventilators, centrifugal pumps, etc.

5.2.3 Three-phase squirrel-cage asynchronous electric motors

The rotor of this asynchronous electric motor consists of a system of mutually connected conductors – bars (squirrel-cage). The bars of the squirrel-cage rotor winding are made of aluminium and they are manufactured by die casting. The size and shape of rotor bars influence the run-up characteristics of the motor. For this reason rotors of different slots shape are manufactured. The slots are either round or rectangular.

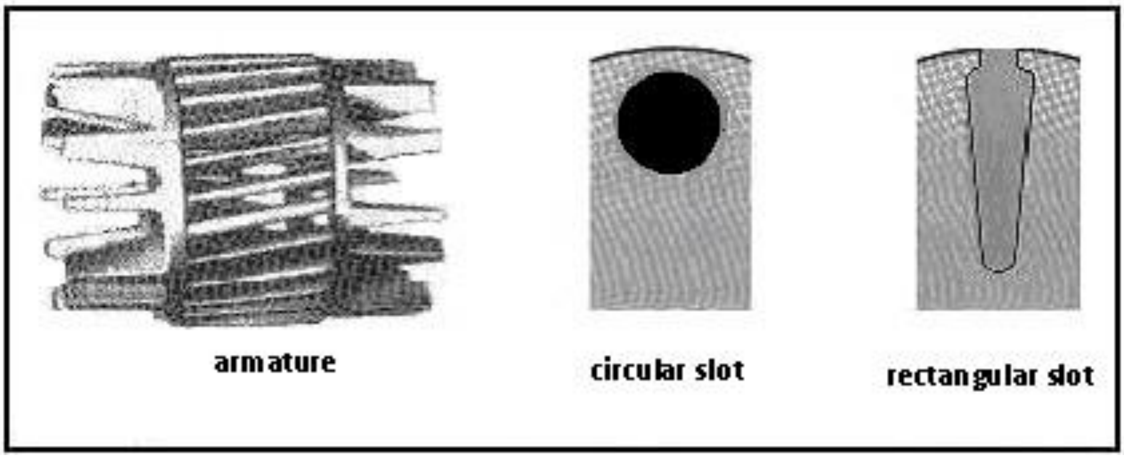

Fig. 2.5 *Slots*

Stator winding may consist of two-pole or multiple-pole winding. Three-phase asynchronous motors there include three windings which are embedded into the slots of stator lamination bundle. Their beginnings are shifted by 120° from either of the two winding pairs. If we connect the endings of these three windings, we get so called Y-connection. If the ending of one winding is connected to the beginning of the following winding, we get so called delta connection.

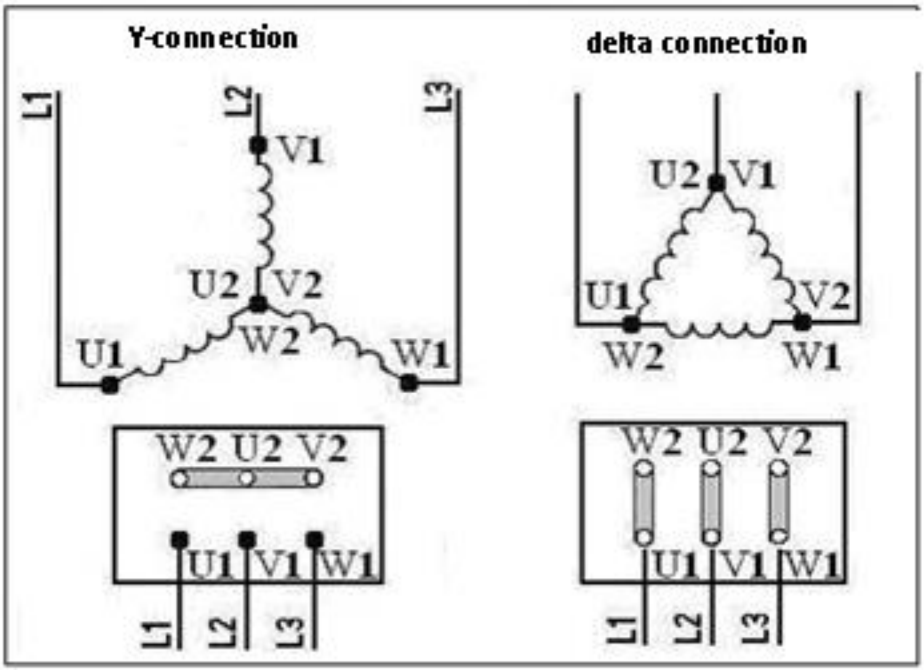

Fig. 3.5 *Stator connected in Y-connection, delta connection, and the connection of terminal box*

If we connect three-phase current into the stator (the same one as in the case of three-phase generator), a rotating magnetic field is created in the stator cavity (vector ***B*** rotates with the frequency of the current).

The rotating magnetic field arouses induced currents in the rotor. The magnetic field creates forces that have an effect on the rotor. The rotor is forced by these forces to oppose the rotating magnetic field into a state of relative inaction (Lenz's law). The rotor begins to spin and its spin frequency is lower than the frequency of rotating field. **In the case of asynchronous motor the revolutions (frequencies) of the rotor are always lower than so called synchronous revolutions (frequencies) of the rotating magnetic field.**

The frequencies difference of the rotating field and rotor is called **slip**. Its magnitude depends on the motor load. **The greater the slip, the greater is the induced current and the greater is the power take-off from the mains and the greater is the magnetic force which has an effect on the rotor. The torque of a motor is increasing simultaneously.**

Practically, the slip is expressed in percent by the following formula:

$$\boldsymbol{s} = \frac{f\,p - f\,r}{f} * 100(\%)$$

The slip of a fully loaded electric motor is usually 2-5 %. For motors up to 5.5 kW the value is from 3.5 % up to 6 %, and for high power motors the value is from 2.5 % up to 3.5 %. **The slip of asynchronous motors increases with increasing load.** At the moment of its connection to the mains (turn-on) the squirrel-cage motor operates as a transformer with short-circuit secondary winding. The power take-off is large, especially if bars of a circular cross section are used. Active (ohmic) resistance is very small and induction current prevails in the motor. The rotor current lags behind the rotor voltage up to 90°. This is the cause of a very small power factor cos□ during the run-up. Active power and actual starting torque are small even though the stator current is large. These disadvantages are eliminated by a rotor with deep slots.

SOURCE TEXT

1.4 Elektrárny

1.4.1 Tepelná elektrárna

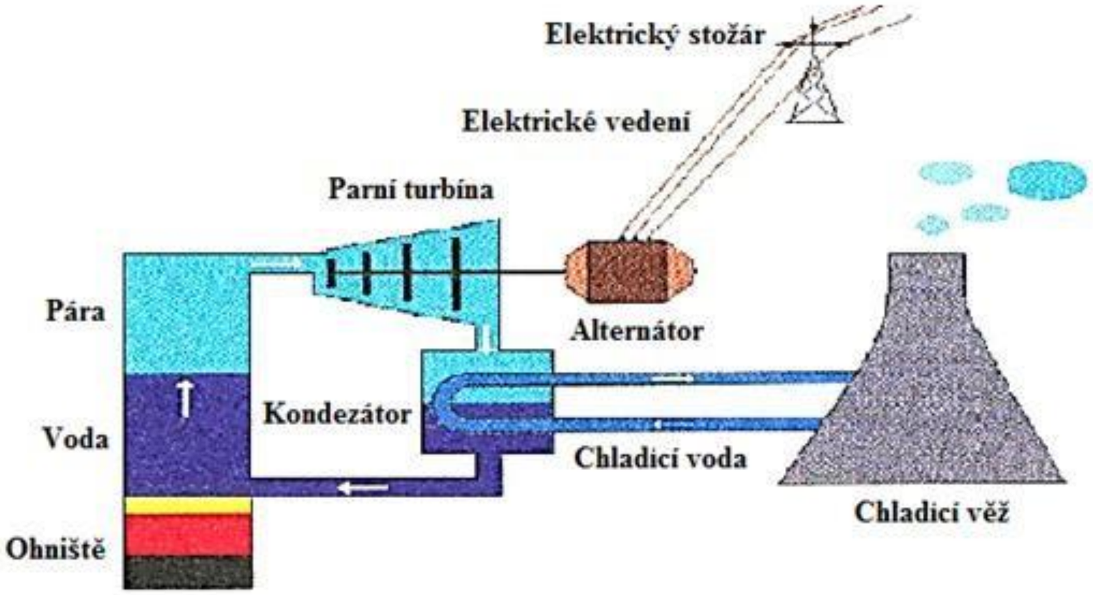

Obr. 4.1 *Schéma tepelné elektrárny*

Spalováním fosilního paliva, obvykle hnědého energetického uhlí, se uvolňuje teplo, kterým se v parním kotli zahřívá voda, vzniká pára o vysoké teplotě a tlaku. Pára proudí na lopatky parní turbíny, ve které se část energie páry přemění na kinetickou energii turbíny. Na společné ose s turbínou je umístěn generátor elektrického proudu, tomuto soustrojí se říká **turbogenerátor** nebo turboalternátor. Pára se po průchodu turbínou odvádí do kondenzátoru, kde ji chladí voda. Čerpadlo vhání zkapalněnou páru zpět do parního kotle a celý proces se opakuje.

U každé tepelné elektrárny stojí chladicí věže, ve kterých se proudem vzduchu ochlazuje chladicí voda, která v kondenzátoru ochlazuje páru a tím se sama zahřívá. Kromě popsané elektrárny vyrábějící pouze elektrickou energii (tzv. kondenzační elektrárna) jsou dnes běžně v provozu i teplárny, ve kterých probíhá kombinovaná výroba elektřiny a tepla. K výrobě elektřiny se nevyužívá veškerá dostupná energie páry, ale část energie se využívá k dálkovému vytápění bytů a průmyslových objektů. Spojení tepelné elektrárny s teplárnou se nazývá **kogenerační jednotka**.

Energie přehřáté páry může být využita jen částečně jako u každého tepelného motoru. Je-li vstupní teplota páry 530 ºC ≅ 800 K a výstupní teplota 130 ºC ≅ 400 K, pak může být teoreticky dosažitelná účinnost [(800 – 400)/800] · 100 = 50 %. Turbogenerátory dosahují prakticky účinnosti 45 %, neboť při přeměně mechanické energie turbíny na elektrickou

energii je dosahováno účinnosti větší než 90 %. (50* 90) · 100 = 45%

1.4.2 Jaderná tepelná elektrárna

Liší se od klasické tepelné elektrárny v podstatě jen zdrojem tepla potřebného ke vzniku páry. Tím zdrojem je jaderný reaktor, ve kterém se teplo získává štěpením jader uranu 238, který je obohacen uranem s nukleonovým číslem 235, pomalými neutrony. Štěpení uranu může nastat pouze pomalými neutrony, které uváznou v jádře atomu. Vznikají dva středně těžké prvky a tři nové neutrony, které dále štěpí další jádra uranu.

V jaderném reaktoru jsou důležité řídicí tyče s velkým obsahem kadmia, které jsou schopny zcela pohltit neutrony a tím štěpnou reakci zastavit, a moderátor (grafit nebo těžká voda), který zpomaluje neutrony.

Kvůli ochraně před radioaktivním zářením má tepelný systém jaderné elektrárny dva okruhy. Voda v primárním okruhu proudí aktivní zónou reaktoru, odebírá teplo vzniklé štěpením uranu pomalými neutrony a v parogenerátoru (tepelném výměníku) se tímto teplem zahřívá voda sekundárního okruhu. Vzniklá pára pohání turbínu stejně jako v klasické tepelné elektrárně.

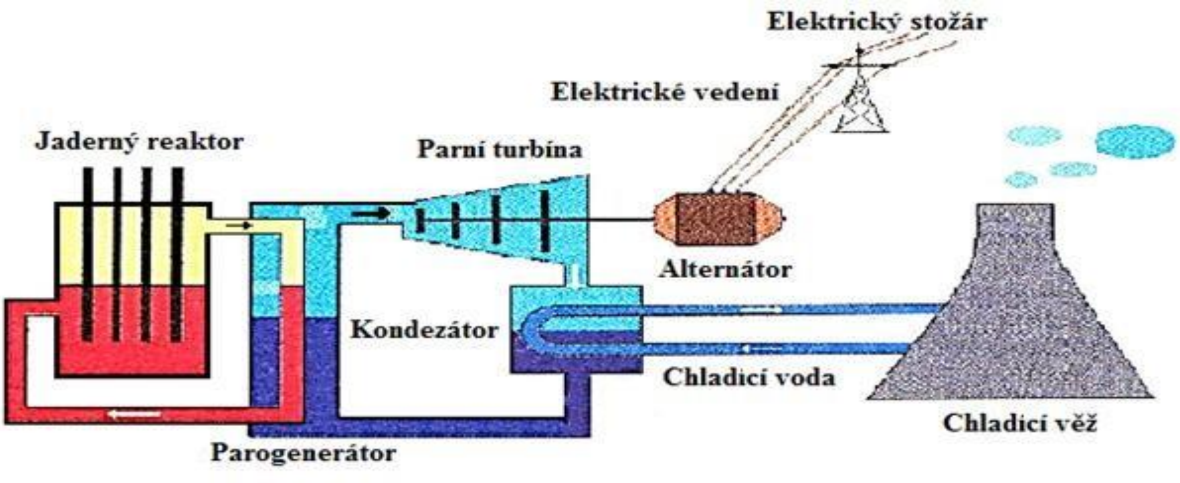

Obr. 5.1 *Schéma jaderné tepelné elektrárny*

1.5.3 Transformátor

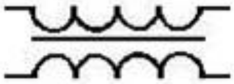

Obr. 15.1 *Značka transformátoru*

Transformátor je netočivý elektrický stroj, který přeměňuje (transformuje) střídavé hodnoty napětí a proudu na hodnoty větší nebo menší téže frekvence.

Jednofázový transformátor se skládá z cívky primární (vždy je připojena ke zdroji střídavého napětí), sekundární cívky a jádra složeného ze vzájemně odizolovaných plechů, aby se snížily ztráty způsobené Foucaltovými - vířivými proudy.

Transformátor funguje na principu elektromagnetické indukce – časovou změnou proudu v cívce primární se indukuje napětí na cívce sekundární.

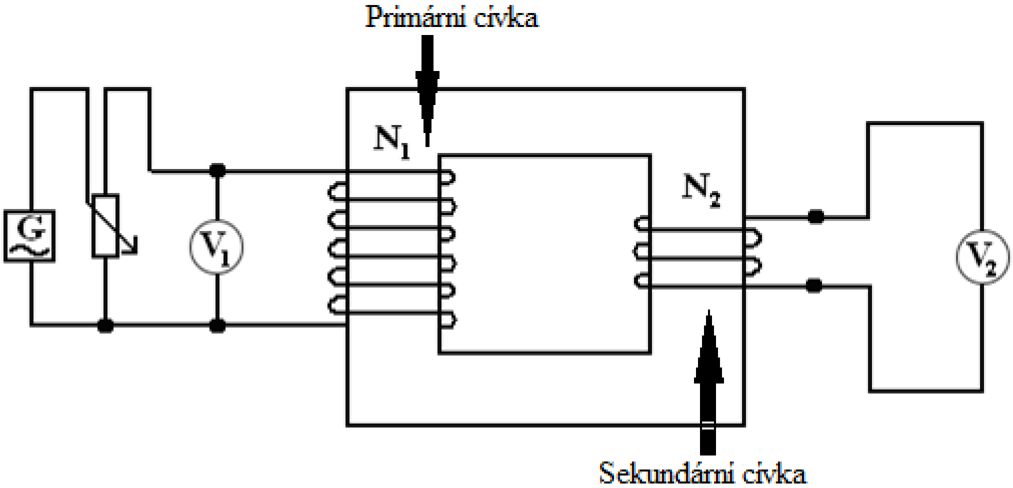

Obr. 16.1 *Transformátor – zapojení v obvodu*

Pro napětí U_1 platí vzorec $U_1 = N_1 \frac{\Delta\Phi}{\Delta t}$ a pro napětí $U2$ vzorec: $U_2 = N_2 \frac{\Delta\Phi}{\Delta t}$

Pro poměr indukovaných napětí platí **transformační rovnice**, která definuje transformační poměr konstantou úměrnosti **k** (v elektrotechnice se rovněž používá písmene **p,** pak však jsou poměry naopak):

$$k = \frac{N_2}{N_1} = \frac{U_2}{U_1} = \frac{I_1}{I_2}$$

je-li **k** > **1,** pak se jedná o **transformaci nahoru**

je-li **k** < **1,** pak se jedná o **transformaci dolů**

N_2 je počet závitů na sekundární cívce

N_1 je počet závitů na **primární cívce**, která **je připojena ke zdroji střídavého napětí**

U_2 je napětí na sekundární cívce; V

U_1 je napětí na cívce primární; V

I_2 je proud na sekundární cívce; A

I_1 je proud na cívce primární; A

Pro počítání příkladů pomocí transformační rovnice si můžeme pomoci pravidlem:

Kolikrát je větší počet závitů na sekundární cívce než na primární, tolikrát je na sekundární cívce větší napětí než na cívce primární a tolikrát tam je menší proud.

V elektrotechnice se rovnice píše i naopak se značením transformačního poměru p místo k, pak je i poměr veličin naopak. Výsledkově výpočty vycházejí stejně.

Žádný transformátor nemá 100 % účinnost, avšak pro výpočty podílu ve vzorcích můžeme brát, že se rovnají. V transformátoru vznikají ztráty zahříváním vodičů cívek, vířivými proudy a hysterezí.

Jednofázové transformátory se používají tam, kde potřebujeme měnit hodnoty proudu nebo napětí – rozhlasové přístroje, měřicí přístroje, nabíječky do mobilů, dětská autodráha.

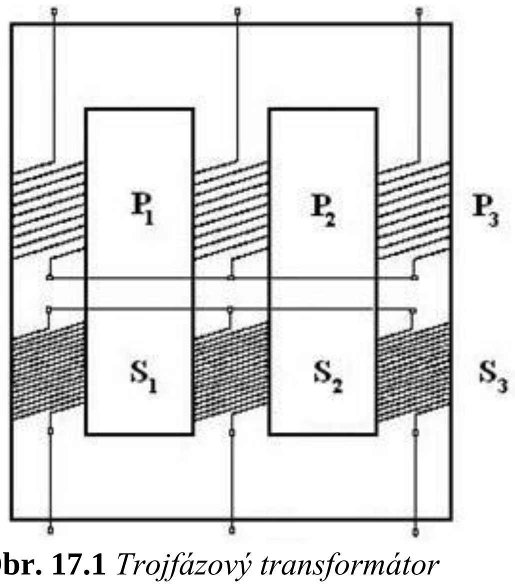

Obr. 17.1 *Trojfázový transformátor*

Trojfázové transformátory mají tři magnetické větve. Každá fáze má vlastní primární a sekundární vinutí. Cívky primárního, popřípadě sekundárního vinutí jsou navzájem spojeny do hvězdy nebo do trojúhelníku.

Transformátory pro velké výkony se při práci hodně zahřívají, a proto je musíme chladit. Větší transformátory bývají ponořeny ve speciální nádobě s olejem odvádějícím teplo a chladí se přes stěny nádoby vzduchem.

Cvičení 1

1. Na obrázku znázorňujícím transformátor určete počet a poměr závitů a vypočítejte napětí a proud na sekundární cívce, jestliže na primární cívce bylo napětí 10 V a cívkou protékal proud 20 mA.
   [U_2 = 5 V, I_2 = 40 mA]

2. Jaký počet závitů musí být na sekundární cívce vůči primární, jestliže chceme mít na sekundární cívce 10 x větší proud než na cívce primární?
   [N_1 je 10 x menší]

3. Primární cívka má 600 závitů, sekundární cívka má 6 závitů. Primární cívka je připojena na napětí 230 V a prochází jí proud 10 mA. Určete velikost napětí a proudu na sekundární cívce.
   [U_2 = 2,3 V, I_2 = 1 A]

4. Příkon transformátoru je 800 W, účinnost je 96 %. Jaký proud prochází sekundárním vinutím, jestliže sekundární napětí je 100 V?
   [I = 7,68 A]

5. Určete transformační poměr transformátoru, který připojíme na síťové napětí 230 V a ze sekundárního vinutí chceme odebírat napětí 10 V a proud 2 A. Jaký je proud I_1?
   [k = 0,0435; I_1 = 0,087 A]

6. Kde v praxi potřebujeme na sekundárním vinutí velké napětí, malé napětí a velký elektrický proud?

3. Kapitola

Elektrický obvod a jeho prvky

3.1 Vedení elektrického proudu v kovech

Elektrický proud v kovech vedou volné elektrony v krystalické mřížce kovu. Stejnosměrný elektrický proud je pohyb volných elektronů v kovu jedním směrem. Technický směr proudu je stanoven od + pólu k – pólu zdroje napětí. Technický směr proudu je směr pohybu kladného náboje v obvodu (směr proti pohybu elektronu).

Velikost elektrického proudu *I* se určí výpočtem podle vzorce:

$I = \frac{\Delta Q}{\Delta t}$ $\quad$ $Q = I \times \Delta t$ $\quad$ $\Delta t = \frac{\Delta Q}{I}$

ΔQ je změna elektrického náboje (Δ označuje změnu veličiny),

jednotka elektrického náboje je C, název jednotky je coulomb [kulomb], Δt je změna času, jednotka je s = sekunda.

Obvodem protéká elektrický proud 1 ampéru (A), jestliže jím projde elektrický náboj 1 coulombu (C) za dobu 1 sekundy (s).

Při výpočtech používáme i veličinu **proudová hustota**: $j = \frac{I}{S}$

Hustota proudu (proudová hustota) se definuje jako vektor j, který je orientován ve směru pohybu kladného náboje a má velikost číselně rovnou velikosti proudu, který projde jednotkovou plochou.

Jednotkou je $A \cdot m^{-2}$ (v technické praxi se používá jednotka $A \cdot mm^{-2}$).

<u>Cvičení 1</u>

1. Určete velikost elektrického proudu, který prochází vodičem, jestliže vodičem za 2 ms projde náboj 2μ C .

   [*I* = 1 mA]

2. Určete čas potřebný k průchodu elektrického náboje 2 μC vodičem, jestliže vodičem prochází elektrický proud 5 mA.

[Δt = 0,0004s]

3. Určete velikost elektrického náboje, který za čas 5 minut projde vodičem, kterým prochází elektrický proud 0,25 A.
[Q = 75 C]

4. Průměr vodiče je 0,226 mm. Stanovte velikost proudu ve vodiči při proudové hustotě 4 A · mm^{-2}.
[I = 0,16 A]

5. Určete velikost náboje, který projde vodičem za 1 den, jestliže vodičem protéká proud 20 mA.
[Q = 1 728 C]

6. Stanovte poloměr vodiče, jestliže při proudové hustotě 5 A· mm^{-2} prochází vodičem proud 10 A.
[r = 0,8 mm]

3.2 Elektrický obvod

Elektrický obvod je vodivé spojení elektrických prvků (rezistory, cívky, kondenzátory, žárovky aj.) se zdroji napětí. Ideálním rezistorem rozumíme zařízení, v němž při průchodu proudu vzniká jen tepelná energie. V ideální cívce se vytváří jen magnetická energie a v ideálním kondenzátoru se vytváří jen elektrická energie. **Všechny tyto prvky jsou *pasivní* (nemohou být trvalým zdrojem energie) a jsou *lineární* (nejsou závislé na proudu a napětí). *Aktivní* prvky jsou zdrojem energie a jsou *nelineární* (závisí na velikosti proudu a napětí).** Samozřejmě, že ideální prvky jsou modely, které v praxi nenajdeme, ale dají se na nich modelovat určité děje za určitých podmínek. Každý elektrický obvod si lze představit jako kombinaci pasivních a aktivních prvků. Skutečné prvky používané v praxi mají vždy i vlastnosti jiných parametrů, což se vyjadřuje náhradními schématy. Například každá cívka má kromě indukčnosti i odpor. Lze ji proto nahradit cívkou a rezistorem zapojenými sériově, nebo paralelně.

Prvky splňují funkce, které jsou od obvodu požadovány, například zesílení signálu, vytváření elektromagnetických vln apod. Obvod může mít malou velikost integrovaného obvodu, nebo je zapojen do větší elektrické sítě. Pokud je dráha, tvořená elektrickým obvodem, uzavřena, pak se jedná o uzavřený obvod, pokud je v obvodu otevřen spínač, pak se jedná o otevřený obvod.

Jednotlivé součásti, ze kterých se skládá elektrický obvod, bývají propojeny pomocí vodičů. Typickým příkladem jednoduchého elektrického obvodu může být baterie (elektrický zdroj), vodiče, tlačítko (spínač, vypínač) a žárovka (spotřebič) (obr. 3.2.1). Ve většině případů je situace mnohem komplikovanější, protože běžný spotřebič se může skládat z desítek, stovek nebo tisíců součástek, z nichž mnohé mohou uvnitř realizovat komplikovaná zapojení skládající se ze stovek, tisíců nebo i milionů prvků. Elektrický obvod rovněž často obsahuje více zdrojů (např. propojené bateriové zdroje) a více vypínačů pro odpojování a přepojování různých částí obvodu.

Aby elektrickým obvodem procházel elektrický proud, musí obvod splňovat tři podmínky:

1) Musí obsahovat zdroj napětí
2) Musí obsahovat spotřebič
3) Mezi spotřebičem a zdrojem napětí musí být vodivé propojení

Spotřebič se **zdrojem** musí být **vodivě**

Cvičení 2

Kterým ze čtyř obvodů bude podle uvedených pravidel procházet trvale elektrický proud? Proč? (viz. Obr. 1.3)

1. 2. 3. 4.

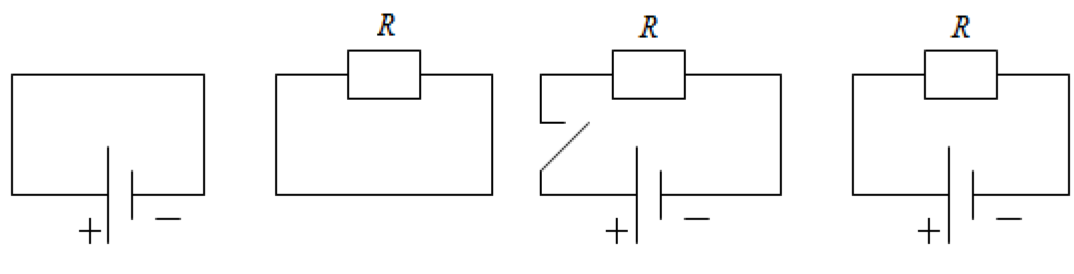

Obr. 1.3 *Obvody pro cvičení 5*

Na dalších dvou obrázcích je znázorněn skutečný obvod a obvod nakreslený pomocí elektrotechnických značek.

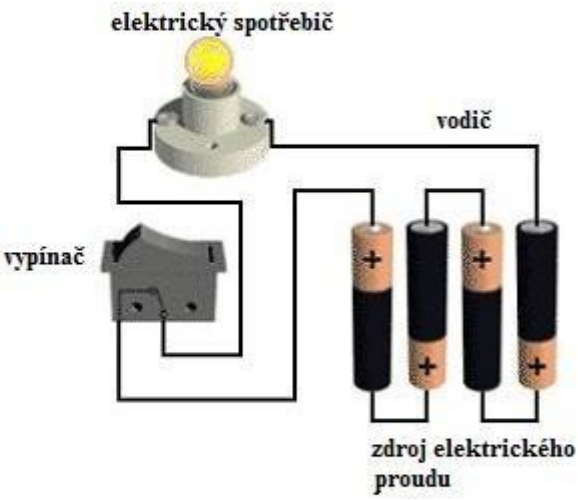

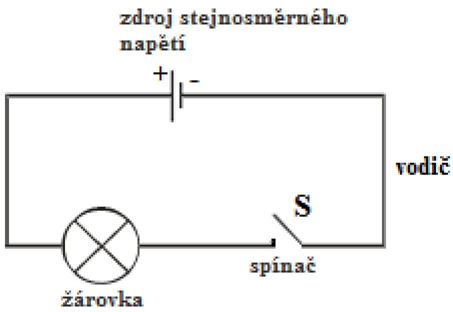

Obr. 2.3 *Skutečný elektrický obvod* **Obr. 3.3** *Elektrický obvod zakreslený značkami*

3.3 Zdroje elektrického napětí a proudu

Zdroje elektrického napětí a proudu rozdělujeme na:

a) **zdroje stejnosměrného napětí a proudu** – galvanické články a dynama
b) **zdroj střídavého napětí a proudu** – alternátor
c) Zdroje dále dělíme podle napěťových hladin, na které jsou projektovány spotřebiče a přenosové soustavy.

3.3.1 Galvanické články

Galvanický článek mění chemickou energii na elektrickou. Galvanický článek je složen z elektrod a jednoho nebo dvou elektrolytů. Na elektrodách vznikají chemické reakce, které jsou příčinou elektromotorického napětí článku.

Galvanické články ke své činnosti využívají **vedení elektrického proudu v kapalinách.**

Elektrický proud v kapalinách **vedou iony, které vzniknou v kapalinách elektrolytickou disociací, což je rozpad látky na iony vlivem rozpouštědla.**

NaCl se ve vodě rozloží na iony $Na^{+} + Cl^{-}$

NaOH se ve vodě rozloží na iony $Na^{+} + (OH)^{-}$

HCl se vlivem vody rozloží na $H^{+} + Cl^{-}$

Záporný ion – anion vznikne odtržením elektronu z elektricky neutrálního atomu nebo molekuly a **kladný ion – kation** vznikne přidáním elektronu k elektricky neutrálnímu atomu nebo molekule.

Elektrický proud v kapalině je usměrněný pohyb ionů.

Ne každý roztok vede elektrický proud. Roztoky, které vedou elektrický proud, nazýváme **elektrolyty, což jsou roztoky solí, kyselin a zásad.** Cukr rozpuštěný v destilované vodě se nerozloží na iony, a proto nevede elektrický proud.

Pokud elektrolytem vedeme stejnosměrný elektrický proud, pak na elektrodách dochází k vylučování ionů. Tomuto ději říkáme **elektrolýza.**

Záporná elektroda se nazývá **katoda** a při elektrolýze se na ní vylučují kladné iony (kationy).

Kladná elektroda se nazývá **anoda** a při elektrolýze se na ní vylučují záporné iony (aniony).

Na katodě se při elektrolýze vylučuje vždy vodík nebo kov!

Jestliže jsou elektrody z mědi, pak se na katodu vylučuje měď a z anody se měď vylučuje do roztoku při průchodu stejnosměrného proudu elektrolytem.

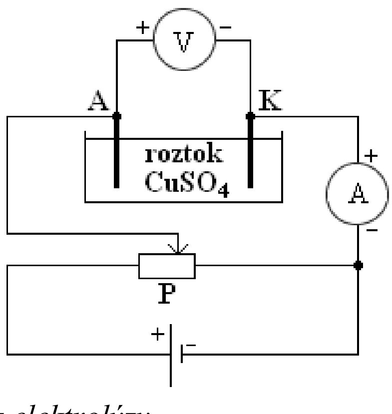

Obr. 4.3 *Obvod na důkaz elektrolýzy*

Pro vedení elektrického proudu v kapalinách platí **Faradayovy zákony elektrolýzy:**

1. $m = A \cdot Q = A \cdot I \cdot \Delta t$; g, kg

Hmotnosti látek vyloučených na elektrodách při elektrolýze jsou přímo úměrné elektrickému náboji, který prošel elektrolytem.

m = hmotnost vyloučené látky (g; kg)

A = elektrochemický ekvivalent ($g \cdot C^{-1}$; $kg \cdot C^{-1}$); je to konstanta pro určitou látku a najdete ji v MFCH tabulkách.

Elektrochemický ekvivalent je číselně roven hmotnosti látky v g (kg) vyloučené na elektrodách při průchodu elektrického náboje 1 C elektrolytem.

Q = elektrický náboj (C); *I* = elektrický proud (A); Δt = čas (s)

3.4.1 Ohmův zákon

Elektrický proud procházející vodičem je přímo úměrný napětí na koncích vodiče při konstantním elektrickém odporu vodiče.

Ohmův zákon $I = \frac{U}{R}$

$U = R \cdot I$

Tyto vzorce vyjadřují lineární závislost proudu na napětí při konstantním odporu.

Vzorec $R = \frac{U}{I}$ je odvozen z Ohmova zákona.

Je to výpočet ohmické konstanty vodiče (rezistoru), která nezávisí na velikosti proudu a napětí, protože **odpor je vlastnost vodiče (rezistoru).** Je to definiční vztah pro jednotku elektrického odporu.

Vodič má odpor 1 ohmu, jestliže vodičem protéká proud 1 ampéru a mezi konci vodiče je napětí jednoho voltu.

I je elektrický proud; A (ampér)

U je elektrické napětí; V (volt)

R je elektrický odpor; Ω (ohm)

Elektrický odpor je vlastnost vodiče, rezistoru (prvku).

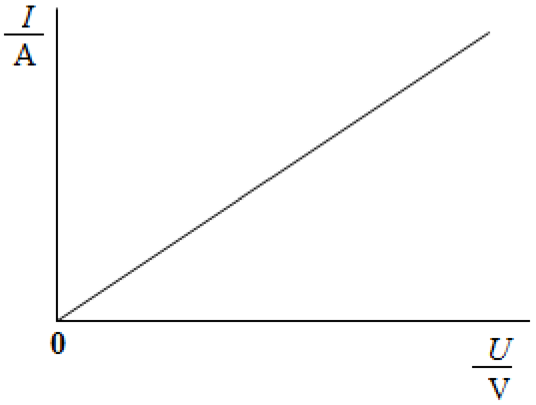

Obr. 12.3 *V-A charakteristika rezistoru s konstantním odporem*

Toto je grafické vyjádření závislosti proudu na napětí u rezistoru, pro který platí Ohmův zákon. Rezistor má konstantní odpor, když zanedbáme jeho zahřívání.

Schéma zapojení prvků v obvodu, na kterém ověřujeme Ohmův zákon. Tento obvod lze použít jen při malých odporech rezistoru. Pro měření se doporučuje použít hodnotu odporu rezistoru do 100 Ω.

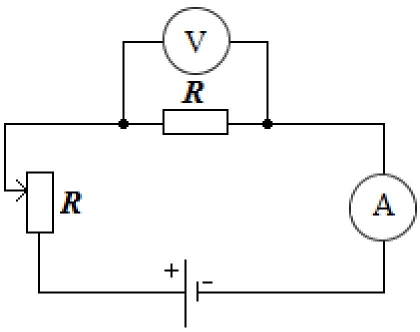

Obr. 13.3 *Schéma zapojení pro ověření Ohmova zákona*

<u>Cvičení 3</u> Příklady na výpočet elektrického odporu

1. Jaká je hodnota velikosti elektrického odporu rezistoru, jestliže na něm naměříme 100 V a prochází jím proud 250 mA.
   [R = 400 Ω]

2. Určete velikost napětí na rezistoru o odporu 2 kΩ, kterým prochází elektrický proud 100 A.
   [U = 200 V]

3. Určete velikost elektrického proudu, který prochází rezistorem o odporu 200 Ω, na kterém je napětí 100 V.

   [I = 0,5 A]

4. Jak se změní hodnota elektrického odporu prvku v obvodu, jestliže se velikost napětí dvakrát zvětší, avšak velikost elektrického proudu zůstane stejná?

   [2 x se zvětší]

5. Jak se změní velikost napětí na rezistoru jestliže velikost odporu zůstane stejná a velikost elektrického proudu se zmenší na polovinu?

   [2 x se zmenší]

6. Určete délku vodičů z mědi a hliníku, jejichž odpor je 200 Ω, plocha průřezu je 0,025 mm^2.

   ρ_{Cu} = 0.0178 μΩm, ρ_{Al} = 0.0285 μΩm.

   [l_{Cu} = 280.9 m; l_{Al} = 175.4 m]

7. Určete velikost elektrického odporu vodiče o délce 28 090 m, který je z mědi a plocha průřezu vodiče má velikost 5 mm^2.

   [R = 100 Ω]

8. Určete měrný elektrický odpor (rezistivitu) a konduktivitu materiálu vodiče, který má délku 1 km, průměr vodiče je 3,57 mm, elektrický odpor má velikost 200 Ω.

   [ρ = 2 μΩm, γ = 0,5 $MS \cdot m^{-1}$]

5. Kapitola

Elektrické stroje

5.1 Druhy elektrických strojů

Elektrické stroje jsou zařízení, která buď vyrábějí elektrickou energii, nebo ji ke své činnosti potřebují. Do první skupiny patří alternátor (str. 52) a dynamo (str. 51), jejichž činnost již byla popsána v předchozích kapitolách, a v druhé skupině jsou elektromotory a transformátor (str. 16).

5.2 Elektrické motory

Elektrické motory se používají v hornictví pro pohon dopravníků, dobývacích strojů, hydraulických agregátů, důlních lokomotiv, těžních strojů apod.

Dělí se na **stejnosměrné** a **střídavé** podle toho, zda na stator přivádíme stejnosměrný nebo střídavý proud. Dále používáme **univerzální** motory, které se dají použít jak na stejnosměrný, tak i na střídavý proud.

5.3 Stejnosměrné motory

Stejnosměrné motory mají tyto části:

- stator
- rotor
- komutátor

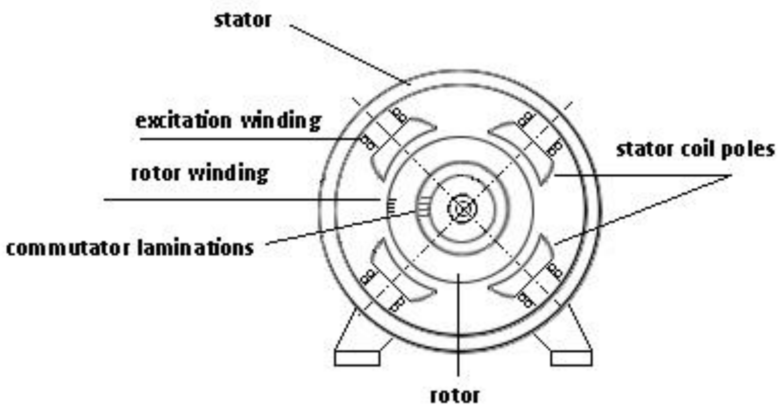

Obr. 1.5 *Řez stejnosměrným motorem*

Stator je nepohyblivá část motoru. Má kostru s hlavními póly s budicím vinutím.

Rotor je pohyblivá část motoru. Je složen z plechů s izolační vrstvou, na povrchu rotoru jsou drážky, v nichž je uloženo vinutí a z něj odbočují vývody k lamelám komutátoru.

Komutátor mění střídavý proud na stejnosměrný. Vlivem komutátoru je ve vodičích rotoru stále stejný směr proudu, a proto má magnetická síla $F_m = B \cdot I \cdot l$ stále stejnou orientaci.

B je magnetická indukce; T (tesla)

I je elektrický proud; A (ampér)

l je aktivní délka vodiče; m (metr)

***F*m** je magnetická síla; N (newton), čte se [ňutn]

Podle vzájemného zapojení budicího a rotorového vinutí rozlišujeme stejnosměrné motory na:

1. s paralelním buzením
2. se sériovým buzením
3. s kompaudním buzením
4. s cizím buzením

1. **Motor s paralelním buzením** - budící vinutí je připojeno paralelně k vinutí motoru. Budicí vinutí má velký počet závitů malého průřezu. Reostatem lze měnit budicí proud a tím se mění otáčky rotoru ve velkém rozsahu. Motor má ještě spouštěcí rezistor, u kterého se při rozběhu motoru odpor zmenšuje a při skončeném rozběhu je velikost odporu spouštěče nulová. Při spouštění motoru je odpor reostatu na budícím vinutí nulový a u spouštěče maximální. Motor má tvrdou charakteristiku, to znamená, že otáčky s rostoucím zatížením klesají jen nepatrně. Motor je vhodný pro všechny druhy průmyslových pohonů, zvláště pak pro automatizovaná zařízení. Používá se například u obráběcích strojů, dopravníků a dopravních prostředků.
2. **Motor se sériovým buzením –** má vinutí statoru a rotoru zapojeno sériově a proud, který oběma vinutími prochází, je stejný. Budicí vinutí má malý počet závitů o velkém průřezu. Motor má měkkou charakteristiku, to znamená, že otáčky s rostoucím zatížením výrazně klesají. Motor má velký záběrný moment, točivý moment s

klesajícími otáčkami roste. Je to typický trakční motor, vhodný pro elektrická vozidla a transportní zařízení.

3. **Motor s kompaundním buzením** – má paralelní i sériové budicí vinutí. Podle toho, které z obou vinutí převládá, lze dosáhnout charakteristik blízkých buď motoru se sériovým, nebo paralelním buzením. Používá se na zařízení s velkými setrvačnostmi, jako jsou zdvihací, lisovací a válcovací stroje.

Otáčky stejnosměrných motorů je možné regulovat těmito způsoby:

- *změnou napájecího napětí rotoru* – provádí se zařazováním odporu do obvodu rotoru. S rostoucím odporem otáčky klesají a naopak. Regulace se provádí na nižší otáčky, než jsou základní, a ekonomicky je výhodnější, má-li motor svůj regulovaný zdroj stejnosměrného napětí,
- *změnou budicího proudu* – při zvětšování budicího proudu otáčky klesají, budicí proud regulujeme zařazováním reostatu do obvodu budicího vinutí. Tento způsob používáme na zvětšování otáček nad základní otáčky. Ztráty jsou ve srovnání s výkonem motoru malé, *kombinací obou předchozích způsobů,*
- (*reverze*) – což je změna směru točení motoru přehozením přívodů k budicímu vinutí nebo vinutí motoru.

5.2.2 Elektrické motory střídavé

1. synchronní, kde jsou otáčky magnetického pole stejné jako otáčky rotoru
2. asynchronní, kde jsou otáčky pole a rotoru různé

Jednofázové asynchronní motory pro pohon domácích spotřebičů. Ty se dělí na: **Jednofázové motory s pomocnou odporovou fází** do výkonu asi 250 W. Tam je tepelná zátěž vinutí velká, a proto se tyto motory nepoužívají pro pohon s častým vypínáním a zapínáním.

Kondenzátorové motory s provozním kondenzátorem jsou vhodné pro pohony s lehkou zátěží nebo pro chod naprázdno.

Motory s rozběhovým kondenzátorem jsou vhodné pro zařízení, která při rozběhu pracují pod velkou zátěží (ždímačky).

Motory s rozběhovým i provozním kondenzátorem (rozběhový kondenzátor se po rozběhu odpojí) se používají pro pohony s těžkou zátěží (kompresory).

Motory se stíněnými póly jsou vhodné pro malé výkony asi jen do 500 W a používají se na pohon ventilátorů, čerpadel, ždímaček.

Synchronní motory se používají pro pohon velkých jednotek, které nevyžadují regulaci otáček a časté spouštění. V hornictví se používají pro pohon kompresorů, ventilátorů, odstředivých čerpadel apod.

5.2.3 Trojfázový asynchronní elektromotor s kotvou nakrátko

Rotorem asynchronního elektromotoru je soustava spojených vodičů - tyčí (kotva nakrátko). Tyče rotorového vinutí motoru s kotvou nakrátko jsou z hliníku a vyrábějí se tlakovým litím. Velikost a tvar rotorových tyčí ovlivňuje rozběhovou charakteristiku motoru, proto se vyrábějí rotory s různými tvary drážek, buďto je drážka kruhová, nebo hluboká.

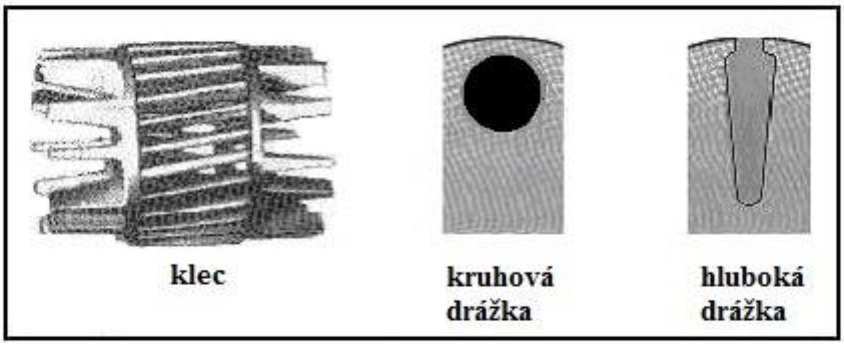

Obr. 2.5 *Drážky*

Statorové vinutí se může skládat z dvoupólového nebo vícepólového vinutí. U trojfázových asynchronních motorů jsou do drážek statorového svazku plechů vložena tři vinutí, jejichž začátky jsou proti sobě posunuty o 120°. Spojíme-li konce těchto tří vinutí, vznikne **zapojení do hvězdy**. Je-li spojen konec jednoho vinutí se začátkem následujícího vinutí, vzniká **zapojení do trojúhelníka**.

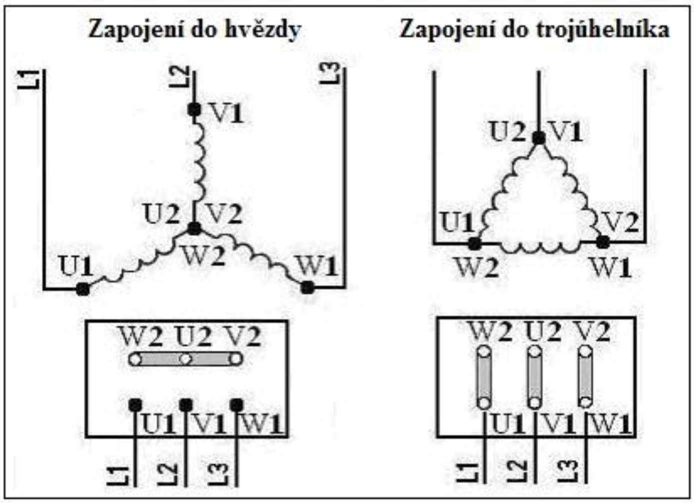

Obr. 3.5 *Zapojení vinutí statoru do hvězdy a do trojúhelníka a zapojení svorkovnice*

Zavedeme-li do statoru (stejného jako u trojfázového generátoru) trojfázový proud, vznikne v dutině statoru točivé magnetické pole (vektor ***B*** se otáčí s frekvencí proudu).

Točivé magnetické pole vyvolá v rotoru indukované proudy. Na rotor začnou v magnetickém poli působit síly, které se jej snaží uvést vůči točivému magnetickému poli do relativního klidu (Lenzův zákon). Rotor se roztočí, frekvence jeho otáčení je nižší než frekvence točivého pole. **U asynchronního motoru jsou otáčky (frekvence) rotoru vždy menší než tzv. synchronní otáčky (frekvence) točivého magnetického pole.**

Rozdíl frekvencí točivého pole a rotoru se nazývá **skluz.** Jeho velikost se mění se zatížením motoru. **Čím je větší skluz, tím je větší indukovaný proud a tím větší je odběr energie ze sítě a na rotor působí větší magnetická síla. Tím se současně zvětšuje moment otáčení motoru.**

V praxi se skluz vyjadřuje v procentech podle vzorce:

$$\boldsymbol{s} = \frac{f\,p - f\,r}{f} * 100(\%)$$

Skluz při plném zatížení elektromotoru bývá 2-5 %. U motorů do 5,5 kW je to 3,5 % až 6 %, u motorů o větších výkonech to je 2,5 až 3,5 %. **Skluz asynchronních motorů se zatížením roste.** V okamžiku připojení k síti (zapnutí) se chová motor s kotvou nakrátko jako transformátor se sekundárním vinutím spojeným nakrátko. Odběr proudu je proto velký, zvláště při použití tyčí kruhového průřezu. Činný (ohmický) odpor je velmi malý a u motoru převažuje induktivní odpor. To způsobí zpoždění rotorového proudu za napětím rotoru téměř o 90°. Proto je účiník $\cos\varphi$ při rozběhu motoru velmi malý. Činný výkon a užitečný záběrový moment je přes velký statorový proud malý. Tyto nevýhody odstraňuje rotor s hlubokými drážkami.